CYCLOIDAL REDUCER

THE REAL BEST DRIVE

Catalogue



compact series

16 Sizes

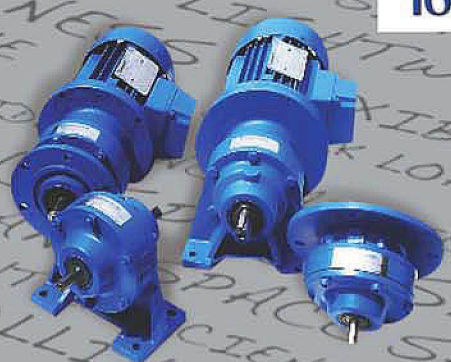

FORCE

Ratio 7 to 658503

Torque 69 to 39000 Nm



OKUMA-Machining



FORCE



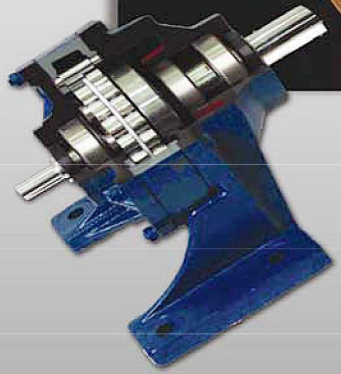





Assembly Shop

Speed Reducer



The product in this catalogue
are also included in the
DVD-ROM catalogue

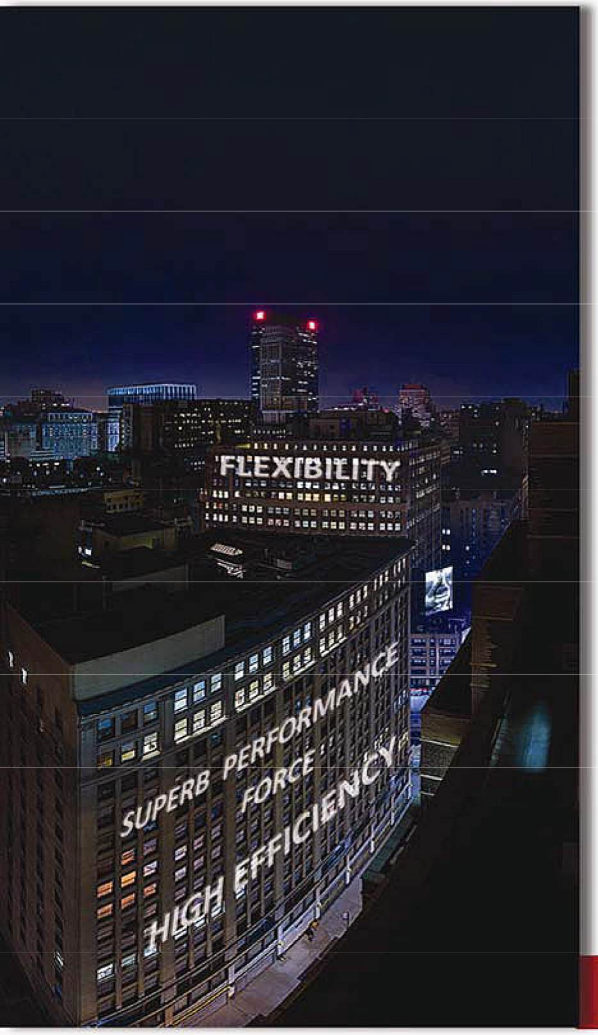

1. Product Introduction

Product Characteristics
Cycloidal Speed Reducer
Cycloidal Advantage
Recommended Load Factor

2. Technical Information

Nomenclature
Number of Starts-Stops and Load Factor
Product Structure
Transmission Ratio
Technical Parameter of Single, Double and Triple Stage

3. Selection Table

Gear Reducer For 4 poles Motor 0.25 - 75 kW
Gear Reducer For 6 poles Motor 18.5- 110 kW

4. Dimensions

Single, Double and Triple Stage Dimensions
IEC Motor Dimensions
Mounting Positions

5. Maintenance

Lubrication
Installation
Daily Inspections
Parts List
Rating Plate Refer

A. Service & Application

3Drawing Support CD-FORCE



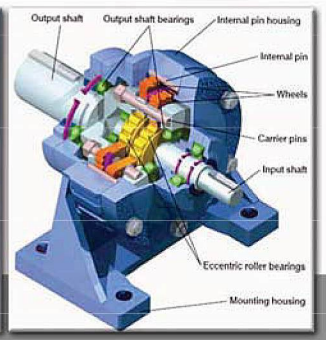



Change for next step

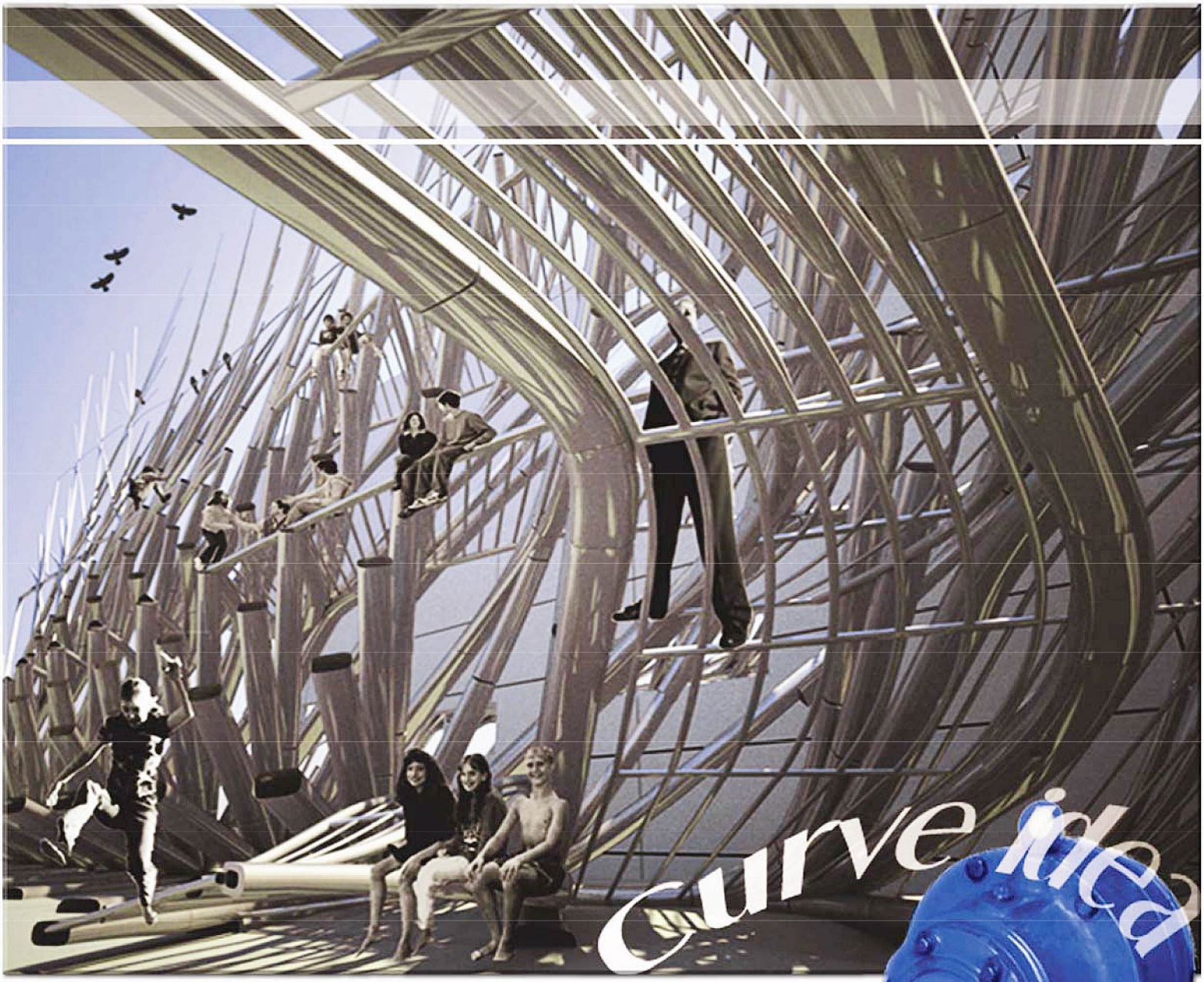



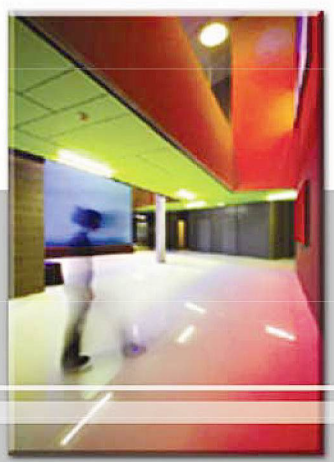



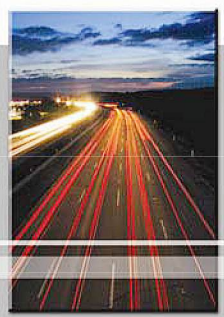

FORCE
The Real
Since 1988



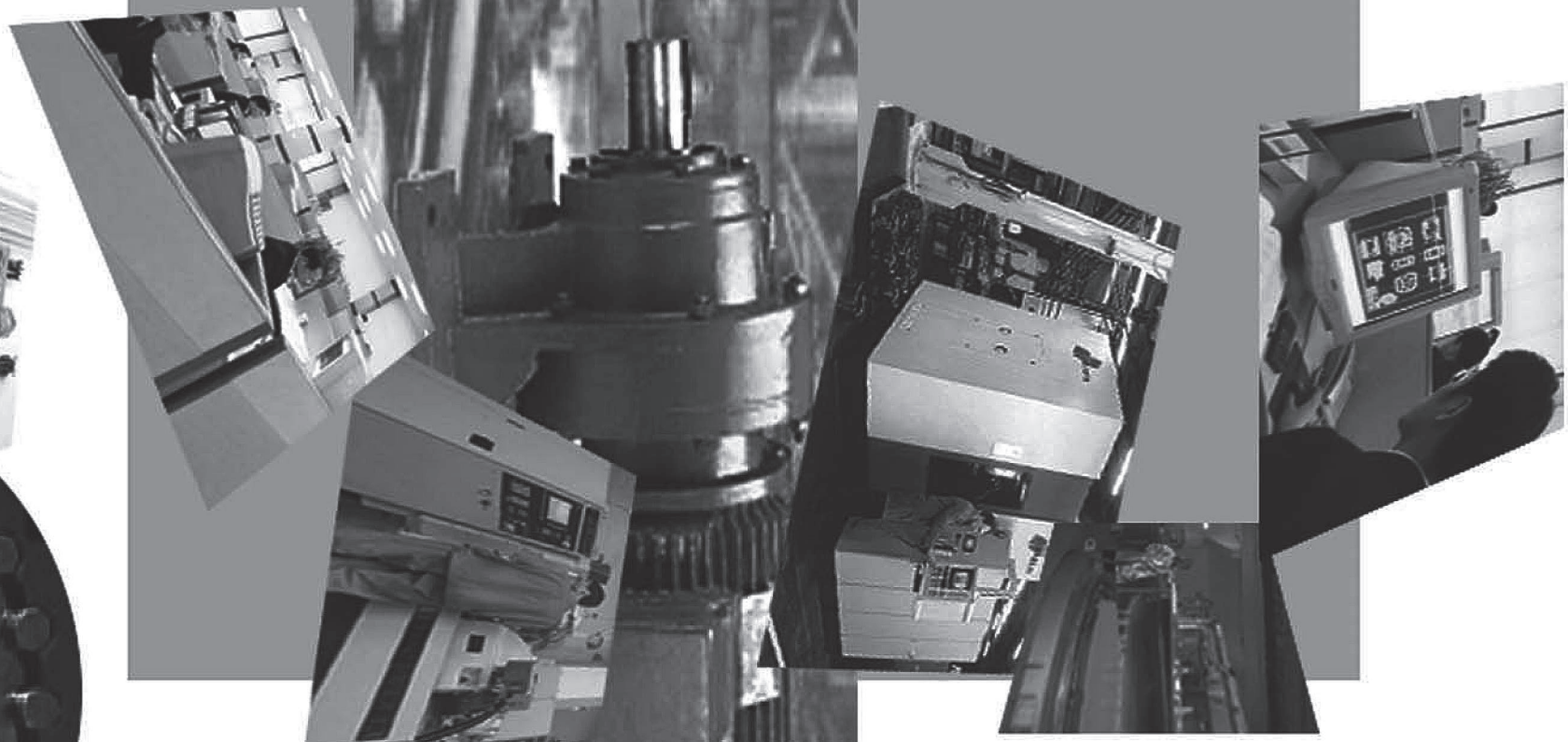

Productions

International System (SI)	Engineering Formulas Technical Measuring System (TM)
Work: $W = F \cdot s$ $W = P \cdot t$ $W = T \cdot \Phi$ $W = \frac{1}{2} J \omega^2$ $W = \frac{1}{182.5} \cdot J \cdot n^2$	$A = P \cdot s$ $E = \frac{1}{7160} \cdot GD^2 \cdot n^2$
Torque: $T = F \cdot r$ $T = 9.55 \cdot \frac{P}{n}$	$M = P \cdot r$ $M = 0.974 \cdot \frac{N}{n}$
Power : $P = \frac{W}{t}$ **Lifting motion:** $P = G \cdot v$ **Rotary motion:** $P = T \cdot \omega$ $P = \frac{1}{9.55} \cdot T \cdot n$ **Linear motion:** $P = F \cdot v$	$N = \frac{A}{T}$ $N = \frac{1}{0.102} \cdot G \cdot v$ $N = \frac{1}{0.974} \cdot T \cdot n$ $N = \frac{1}{0.102} \cdot P \cdot v$
Braking time: $t = \frac{1}{9.55} \cdot \frac{J.n}{T}$	$N = \frac{1}{375} \cdot \frac{GD^2 \cdot n}{T b}$
Mass moment of inertia: $J = \frac{m \cdot r^2}{2} = \frac{G}{2g} \cdot r^2$ $J_{red} = 91.2 \cdot m \cdot \frac{v^2}{n_{mot}}$	$J = \frac{GD^2}{4}$ $GD^2 = \frac{G}{2} \cdot d^2$ m = linear moved mass in kg v = velocity of the mass in m/s n_{mot} = motor speed in min^{-1}
Stop – start frequency: $Z_s = Z_o \cdot \frac{1-T_L / T_{Hm}}{1+J_{zus}/J_{mot}}$	$Z_S = Z_o \cdot \frac{1-T_L / T_{Hm}}{1+J_{zus}/J_{mot}}$ Z_o = no-load stop-start freqence / hour Z_s = permissible stop-start frequence / hour T_L = torque load in Nm T_H = mean running-up torque of the motor in Nm J_{mot} = Moment of inertia of the motor in kgm^2 J_{zus} = Moment of inertia of the load in kgm^2
Three phase motor: Power input: $P_1 = \sqrt{3} \cdot U \cdot I \cdot \cos\varphi$	Power output : $P_2 = \sqrt{3} \cdot U \cdot I \cdot \cos\varphi \cdot \eta$
Temperature increase of motor windings $\Delta T = \frac{R_w - R_k}{R_k} \cdot (235 + \upsilon_k)$	$\Delta T = \frac{R_w - R_k}{R_k} \cdot (235 + \upsilon_k)$ ΔT = Temperature increase at Kelvin υ_k = Ambient temperature (k: cold) in °C $R_w; R_k$ = Resistance of motor winding (w: warm; k: cold) in Ω

SI-Units

Description	Symbol		Unit symbol		Relation or conversion factor *
	SI	previous	SI	previous	
Length (length of path)	L (s)	L, s	m	m	1 km = 1000 m
Area	A	F	m^2	m^2	1 m^2 = 100 dm^2
Volume	V	V	m^3	m^3	1 m^3 = 1000 dm^3
					1 dm^3 = 1 l
					1 rad = 1 m/m
Angle in one plane	α,β,γ	α,β,γ	rad	Grad°	1 L = π/2 rad
					1° = π/180 rad
Angle of rotation	ϕ	φ		degree	1'=1°/60
					1"=1'/60
Time					1 min = 60 s
					1 h = 60 min
Time interval	t	t	s	s	1 d = 24 h
Duration					1 a = 24 h
Frequency	f	f	Hz	1/s	1 Hz = 1/s
Rotational speed	n	n	min^{-1}	r.p.m	revolutions per min
Linear speed	v	v	m/s	m/s	1 km/h = $\frac{1}{3.6}$ m/s
Acceleration	a	b	m/s^2	m/s^2	g = 9.81 m/s^2
Gravitational acceleration	g	g			
Angular velocity	ω	Ω	rad/s	1/s	
Angular acceleration	α	ξ	rad/s^2	$1/s^2$	
Mass	m	m	kg	kg	1
Density		d	kg/dm^3	kg/dm^3	10^3
Force	F	P,K	N	kp	9.81·1 N = 1 kg·1 m/s^2
Weight	G	G			
Pressure	p	p	Pa		1 Pa = 1 N/m^2
			N/m^2	kp/cm^2	9.81 · 10^4
Mechanical stress	σ	σ	N/mm^2	kp/mm^2	9.81
Work	W	A		kpm	9.81
Energy	W	E	J	kcal	4187
Amount of heat	Q	Q			1 J = 1 Nm = 1 Ws
Moment of force		M_t			9.81
Torque	T	M_d	Nm	kpm	1 Nm = 1 J
Bending moment		M_b			
Output power	P	N	W	PS	735.5 1 W = 1 J/s = 1 Nm/s
Moment of inertia	J	θ	kgm^2	kpm^2	9.81
Dynamical viscosity	η	η	Pa · s	P	10^{-1}
Kinematical viscosity	υ	υ	m^2/s	St	10^{-4}
Electrical current	I	I	A	A	1 A = 1W/V = 1V/Ω
Voltage	U	U	V	V	1 V = 1 W/A
Electrical resistance	R	R	Ω	Ω	1Ω = 1 V/A = 1/S
Conductance	G	G	S	S	1 S = 1/Ω
Capacitance	C	C	F	F	1 F = 1 C/V
Quantity of electricity Charge	Q	Q	C	C	1 C = 1 A· s
Self inductance	L	L	H	H	1 H = 1 Vs/A
Magnetic flux density Magnetic induction	B	B	T	G	10^4 1 T = 1 Wb/m^2
Magnetic field strength	H	H	A/m	A/m	
Magnetical flux	ϕ	ϕ	Wb	M	10^8 1 Wb = 1 V· s
Temperature	T(ϑ)	t	K(°C)	°C	0 K= -273.15 °C

*The value in SI-units can be obtained by applying the conversion factor shown.

What is a Cycloidal Speed Reducer?

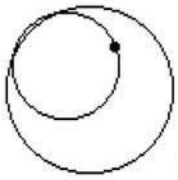

The word *Cycloid*, with its adjective *Cycloidal*, is derived from *Hypocycloid* which describes the curve traced by a point on the circumference of a smaller circle rotating inside the circumference of a larger fixed circle. Just like words such as helical, worm, spur, and bevel, cycloidal is a generic adjective; it merely describes the gearing mechanism inside the speed reducer. No manufacturers shall claim the exclusive use of this word.

To understand the operating principle, you should first know how to determine the reduction ratio of a cycloidal reducer.

Ratio = (P-L) / L

Where P = Number of ring gear pins/rollers
L = Number of lobes on a cycloidal disc

For example, please refer to drawing below, the number of ring gear pins/rollers (P) equals 12, and the number of lobes (L) on the cycloidal disc equals 11.

Ratio = (12-11) / 11 = 1 / 11 = 11:1

As the input shaft turns, the eccentric bearing goes into a rocking motion. This rocking motion exerts an outward radial force on the cycloidal disc. (Figure 1)

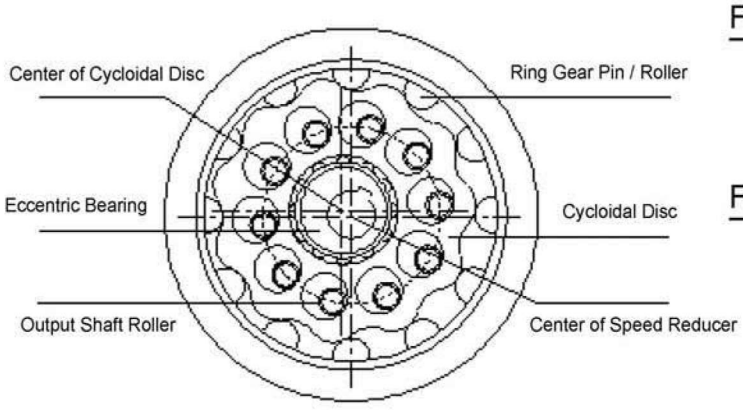

Cut away View of a Ring Gear Sub-Assembly

Figure 1

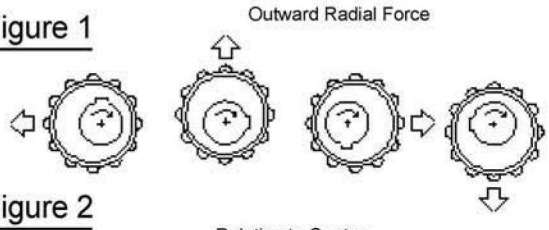

Figure 2

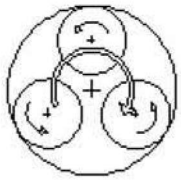

Planetary motion

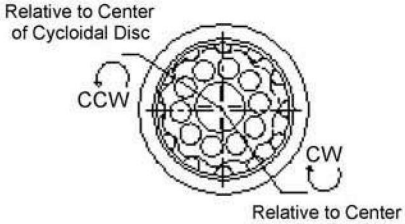

Relative to Center
of speed reducer

Confined inside the ring gear housing with pins/rollers, the cycloidal disc goes into a planetary motion as the eccentric bearing turns. Refer to Figure 2, as a smaller circle rotates inside the circumference of a larger circle, the smaller circle goes into a planetary motion. Relative to its own center, the smaller

FORCE
The real best drive

X-Series Cycloidal Reducer

The cycloidal pinwheel reducer, adopting the cycloidal pin gear mesh, is a new type of driving device developed upon the theory of planetary transmission. It can widely be used as the driving and decelerating equipment in the field of textile, printing, food, feed mill, sewage treatment, sugar, metallurgy, mining, petrochemistry, lifting, transportation, construction, etc.





Product Characteristics

1. High transmission ratio. High efficiency.
The single-stage transmission can reach a transmission ratio of 119, and the average transmission efficiency is above 92.5%. The double-stage transmission can reach a transmission ratio of 5133. The triple-stage transmission can reach a transmission ratio of 658503.

2. Well-structured. Small in bulk.
As the theory of planetary transmission is adopted, the reducer is well-structured as its input and output shaft are on the same shaft line. It is 1/2 - 1/3 less than usual gear reducers with the same power or the same transmission ratio in both dimension and weight.

3. Stable in function. Low in noise.
There are quite a few gear teeth of the cycloidal pin gear mesh and para-mesh, and the overlap coefficient is high, which is in accord with the mechanical principle of balance, reducing the vibration and the noise as much as possible.

4. Reliable performance. Extraordinary durability.
The reducer is reliable in performance with extraordinary durability as the critical parts are made of bearing steel, quenched to improve its hardness and strength. It is rolling friction which provides a high contact ratio during the transmission so that the teeth won't be sheared off. The overload capacity is **500%** strength to withstand overload shocks that break the teeth of ordinary reducers.

5. Suitable for normal-reverse rotation.
This machine also boasts of its low inertia, so it can stand frequent operation and normal-reverse rotation.

6. Easy to mount and demount. Convenient for maintenance.
It's simple to mount and demount, convenient for maintenance, because of the rational design.

circle is rotating in the CCW direction. However, relative to the center of larger circle, the smaller circle is advancing in the CW direction. (Figure 2, left) Cycloidal mechanism works the same way. The smaller circle as described earlier is now almost as large as the larger circle and has the shape of a cycloidal disc. The larger circle now has the shape of a ring gear with pins/rollers. (Figure 2, right) As the eccentric bearing drives the cycloidal disc, the cycloidal disc rotates in one direction relative to its own center. However the cycloidal disc advances in the opposite direction relative to the center of the speed reducer. This planetary motion looks almost like the wobbling movement of hula hoops.

Figure 3

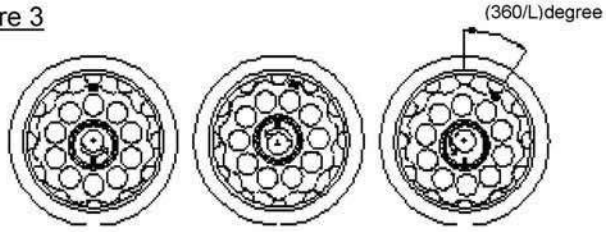

As the eccentric bearing tums one revolution, the cycloidal disc rotates in the opposite direction equal to (360/L) degree or (P/L) pitches of pins/rollers

Figure 4

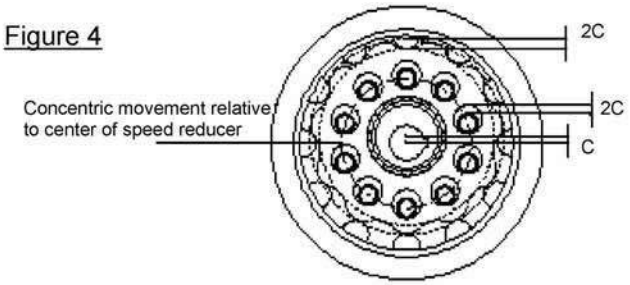

As the eccentric bearing turns one revolution, the cycloidal disc advances in the opposite direction by (360/L) degrees or (P/L) pitches of pins/rollers. (Figure 3) The output direction of cycloidal reducer with single stage reduction equals to the opposite of input direction.

In order to convert the wobbling motion of a cycloidal disc into the smooth concentric movement of output shaft, several output shaft rollers are placed inside the small circles of a cycloidal disc. These rollers are also attached to the output shaft pins. The difference (2C) between the diameter of output shaft roller and the small circle is exactly twice the eccentricity (C) of eccentric bearing. This distance (2C) is also the radial difference between the valley and crest of a cycloidal disc lobe. (Figure 4)

With the arrangement above, the mechanism is capable of converting the rocking motion of an eccentric bearing into the wobbling planetary motion of a cycloidal disc. This motion is then transformed to the smooth concentric movement of output shaft through the output shaft rollers. The speed reduction is achieved, and torque transmission is accomplished.

Cycloidal Advantage



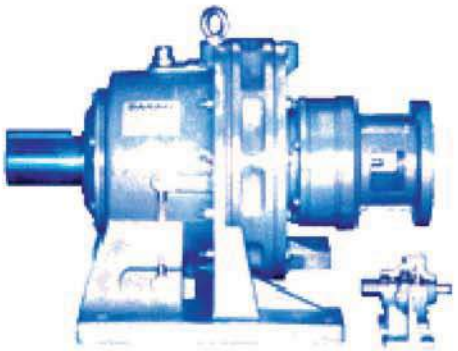

1. **Rolling Contact** - All major torque transmitting components roll; they do not slide. Rolling motion contributes to minimal friction and high efficiency. Single stage efficiency approaches 93%, and double stage efficiency approaches 90%.

Rolling contact, with minimal friction,
Contributes to high operating efficiency

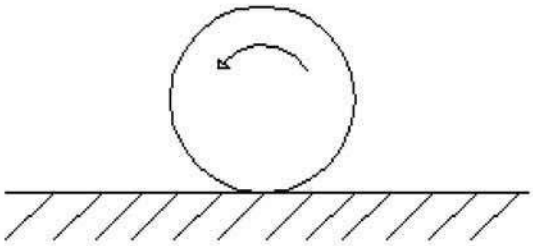

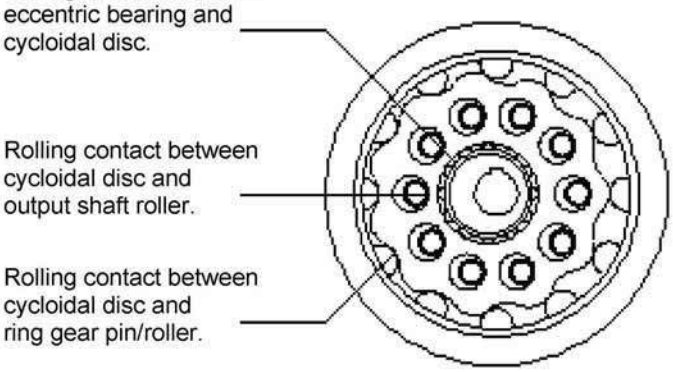

2. **Torque transmitting elements experience COMPRESSION; they do not shear** - Unlike involute gear mechanism which has only 1 or 2 teeth to absorb the entire shock load with possible gear teeth breakage, at least 66% of ring gear rollers and cycloidal disc lobes share the shock load under compression. In addition, major torque transmission components inside the FORCE Cycloidal Reducers are made of 52100 (JIS SUJ2) bearing grade steel and heat treated to Rockwell Hardness of H_RC 61~63. The end result is that FORCE Cycloidal Reducers are capable of withstanding intermittent shock load up to **500%** of its catalog torque rating.



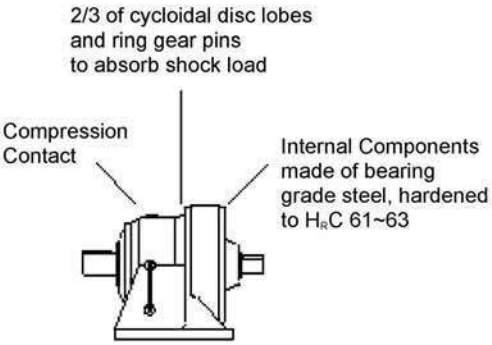

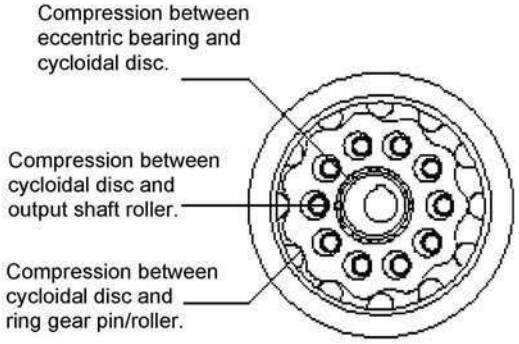

Cycloidal Advantage





3. **Compactness** - Unlike helical speed reducers which require additional stages to achieve higher reduction ratio (increased size/weight, decreased efficiency, more bearings and gears to maintain), changing the ratio of FORCE Cycloidal Reducers(up to 119:1)involves only the changing of ring gear rollers, cycloidal disc lobes, and eccentric bearing. The physical dimensions of speed reducers remain the same.

Cycloidal Reducer Single Stage
7 : 1 ~ 119 : 1

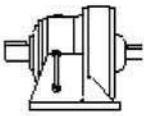

Physical dimensions and number of components remain unchanged.

Helical Speed Reducer
Single Stage up to 7:1 or 8:1

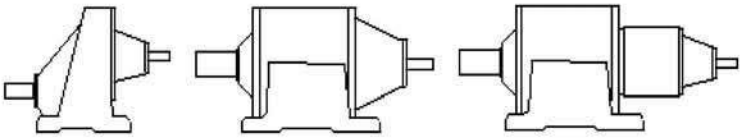

Each additional stage requires two extra bearings and one extra gear; increased size/weight, decreased efficiency, more components to maintain.

4. **Excellent performance against worm gear reducers** - Rolling motion creates minimal friction. Minimal friction contributes to minimal wear and minimal heat generation. Worm gear reducers performance are greatly limited by thermal rating. FORCE Cycloidal Reducers with rolling components internally, enjoy minimal heat loss. The thermal capability of each frame size and ratio of FORCE Cycloidal Reducers exceed its mechanical capability. Worm gear reducers are characterized by lower efficiency; you can select a smaller size FORCE Cycloidal Reducer and still enjoy larger output power. The end result is longer service life and tremendous energy saving !!

Themal rating exceeds mechanical capability

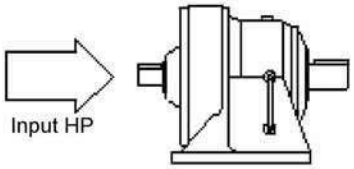

$$ Energy Saving Throughout Duration of Service !!

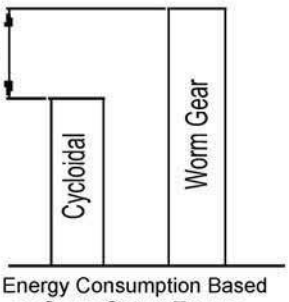

Energy Consumption Based on Same Output Torque

Heat loss due to sliding friction

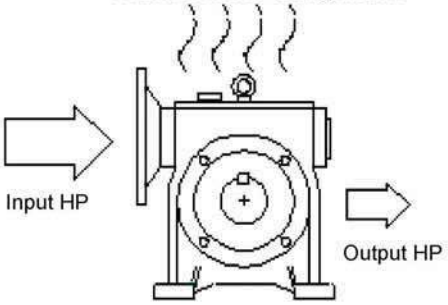

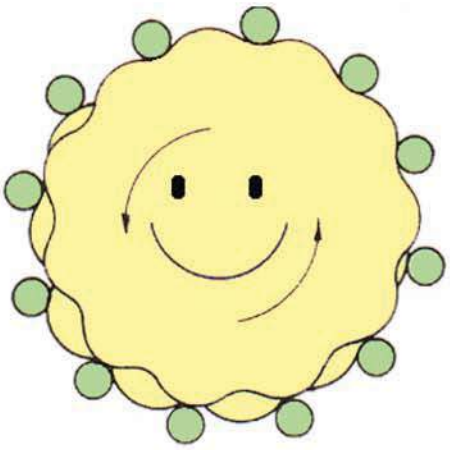

CYCLOIDAL GEAR
Many teeth share the shock of overload.

CONVENTIONAL INVOLUTE GEAR:
1 or 2 teeth absorb the entire shock of overload

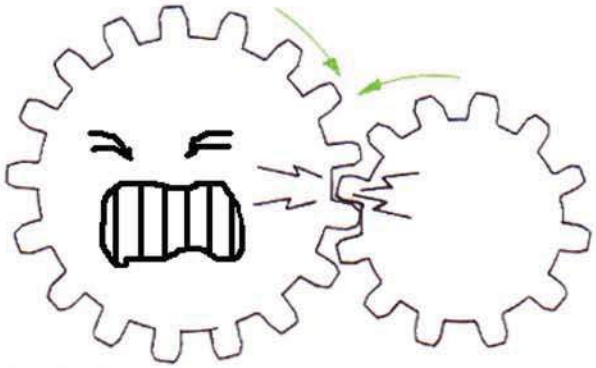

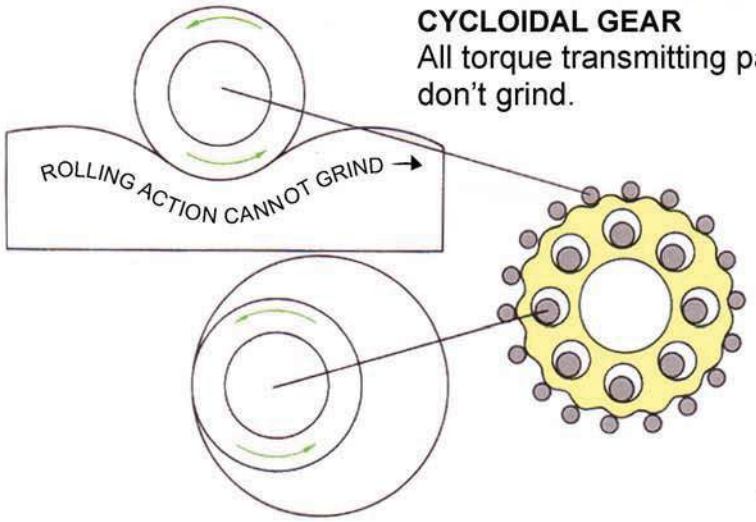

CYCLOIDAL GEAR
All torque transmitting parts roll, don't grind.

CONVENTIONAL REDUCER
Torque transmitting parts grid, wear, and lose efficiency.

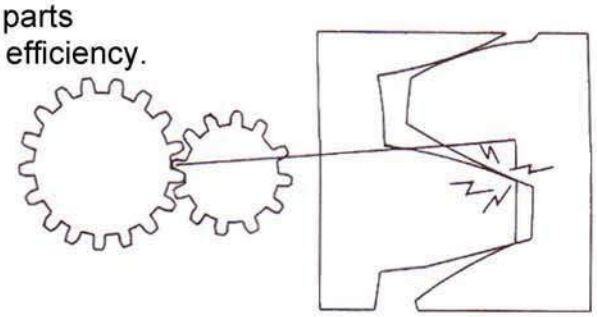

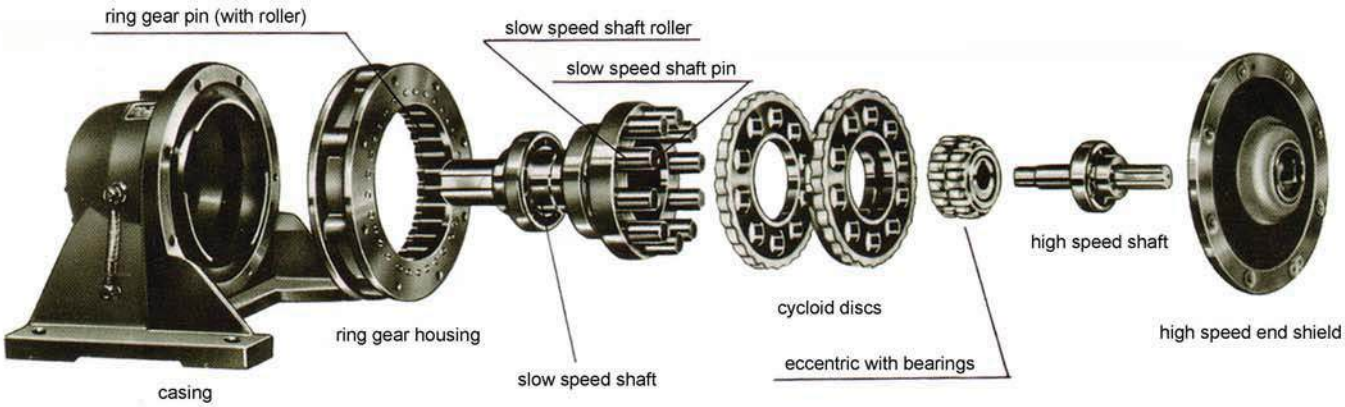

Helical Speed Reducer

1 or 2 teeth absorb the entire shock of overload with possible gear teeth breakage

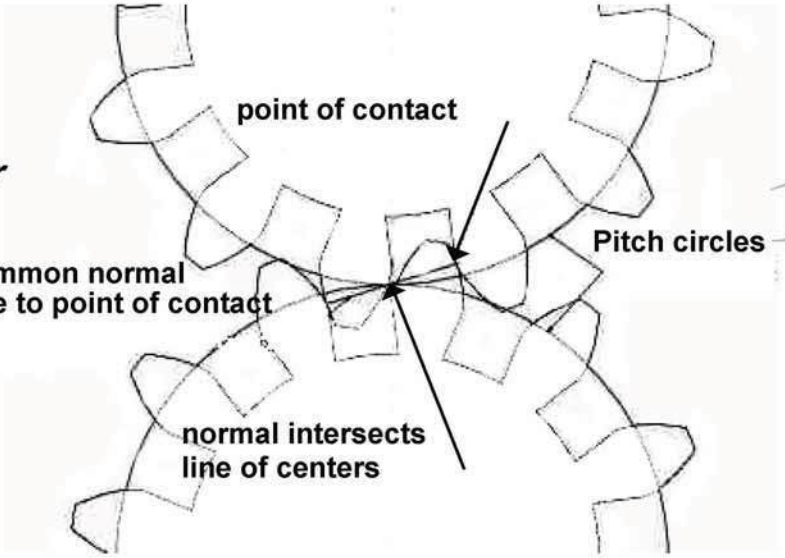

Torque Transmitting Parts Comparision between Helical (left) and Cycloidal (right)

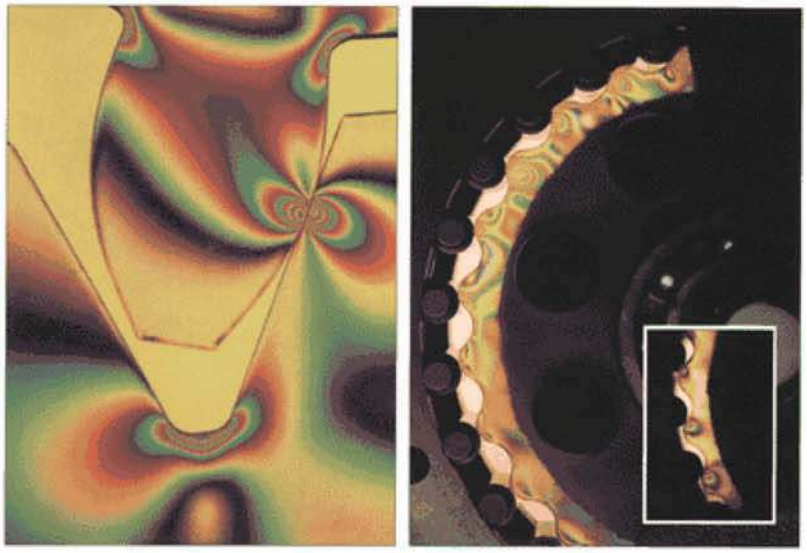

Cycloidal Speed Reducer

More than 66% of ring gear roller and cycloidal disc lobes share the shock load resulting in

"500% Overload Capacity!!!"

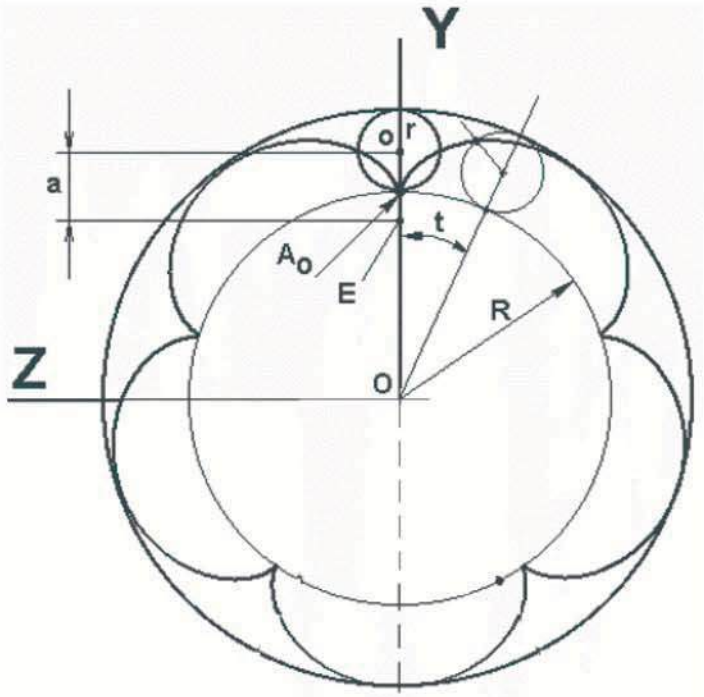

Recommended Load Factor by the Driven Application

U - uniform load, M - moderate shock load, H - heavy shock load

Type of APPLICATION	Type of LOAD
*Aerator	
Agitators	
pure liquids	U
liquids & solids	M
liquids-variable density	M
Blowers	
centrifugal	U
lobe	M
vane	U
Brewing & Distilling	
bottling machinery	U
brew kettles, cont. duty	U
cookers-cont. duty	U
mash tubs-cont. duty	U
scale hopper, frequent starts	M
Can Filling Machines	U
*Cane Knives	M
Car Dumpers	H
Car Pullers	M
Clarifiers	U
Classifiers	M
Clay Working Machinery	
brick press	H
briquette machine	H
clay working machinery	M
pug mill	M
Compressors	
centrifugal	U
lobe	M
reciprocating, multi-cylinder	M
reciprocating, single-cylinder	H
Conveyors-Uniformly Loaded or Fed	
apron	U
assembly	U
belt	U
bucket	U
chain	U
flight	U
oven	U
screw	U
Conveyors-Heavy Duty Not Uniformly Fed	
apron	M
assembly	M
belt	M
bucket	M
chain	M
flight	M
*live roll	
oven	M
reciprocating	H
screw	M
shaker	H
Cranes(Except for Dry Dock Cranees)	
main hoists	
*bridge travel	
*trolley travel	
Crusher	
ore	H
stone	H
**sugar	M
Dredges	
cable reels	M
converyors	M
cutter head drives	H
jig drives	H
maneuvering winches	M
pumps	M
screen drive	H
stackers	M
utility winches	M
*Dry Dock Cranes	
Elevators	
bucket-uniform load	U
bucket-heavy load	M
bucket-cont.	U
centrifugal discharge	U
escalators	U
freight	M
gravity discharge	U
*man lifts	
*passenger	
Extruders (Plastics)	
blow molders	M
coating	U
film	U
pipe	U
pre-plasticizers	M
rods	U
sheet	U
tubing	U
Fans	
centrifugal discharge	U
*colling towers	
induced draft	U
*forced draft	
induced draft	M
large (mine, etc.)	M
large (industrial)	M
light (small diameter)	U
Feeders	
apron	M
belt	M
disc	U
reciprocating	H
screw	M
Food Industry	
beet slicer	M
cereal cooker	U
dough mixer	M
meat grinders	M
Generators (not welding)	U
Hammer mills	H
Hoists	
heavy duty	H
medium duty	M
skip hoist	M
Laundry Washers	
reversing	M
Laundry Tumblers	M
Line Shaft	
driving processing equipment	M
light (small diameter)	U
other line shafts	U
Lumber Industry	
barkers-hydraulic-mechanical	H
burner conveyor	M
chain saw & drag saw	H
chain transfer	H
craneway transfer	H
de-barking drum	H
edger feed	M
gang feed	H
green chain	M
live rolls	H
log haul-locline	H
log haul-well type	H
log turning device	H
main log conveyor	H
off bearing rolls	M
planer feed chains	M
planer floor chains	M
planer tilting hoist	M
re-saw merry-go-round conveyor	M
roll cases	H
slab conveyor	H
small waste-conveyor-belt	U
small waste-conveyor-chain	M
sorting table	M
tipple hoist conveyor	M
tipple hoist drive	M
transfer conveyors	M
transfer rolls	M
tray drive	M
trimmer feed	M
waste conveyor	M
Machine Tools	
bending roll	M
punch press-gear driven	H
*notching press-belt driven	
plate planers	H
tapping machine	H
other machine tools	
main drives	M
auxiliary drives	U
Metal Mills	
draw bench carriage & main drive	M
forming machines	H
*pinch, dryer & scrubber rolls, reversing	
slitters	M
table conveyors-non-reversing	
group drives	M
individual drives	H
*table conveyors-reversing	
wire drawing & flattening machine	M
wire winding machine	M
Mills, Rotary Type	
**ball	M
**cement kilns	M
**dryers & coolers	M
kilns	M
**pebble	M
**rod, plain & wedge bar	M
tumbling barrels	H
Mixers	
concrete mixers, cont.	M
concrete mixers, intermittent	M
constant density	U
variable density	M
Oil Industry	
chillers	M
*oil well pumping	
paraffin filter press	M
rotary kilns	M
Paper Mills	
agitators (mixers)	M
barker-auxiliaries-hydraulic	M
barker-mechanical	M
barking drum	H
beater & pulper	M
bleacher	U
calendars	M
calendars-super	H
converting machine except cutters, platers	M
conveyor	U
couch	M
cutters-platers	H
cylinders	M
dryers	M
Paper Mills	
felt stretcher	M
felt whipper	H
jordans	H
log haul	H
presses	U
pulp machine reel	M
stock chests	M
suction roll	U
washer & thickeners	M
winders	U
*Printing Presses	
Pullers	
barge haul	H
Pumps	
centrifugal	U
proportioning	M
reciprocating single acting, 3 or more cylinders	M
double acting, 2 or more cylinders	M
*single acting, 1 or 2 cylinders	
*double acting, single cylinder	
rotary-gear type	U
rotary-lobe, vane	U
Rubber & Plastics Industries	
**crackers	H
laboratory equipment	M
**mixingmills	H
**refiners	M
**rubber calendars	M
**rubber mill (2 on line)	M
**rubber mill (3 on line)	U
**sheeter	M
*tire building machines	
*tire & tube press openers	
**tubbers & strainers	M
**warmingmills	M
Sand Muller	M
Screens	
air washing	U
rotary-stone or gravel	M
traveling water intake	U
Sewage Disposal Equipment	
bar screens	U
chemical feeders	U
collectors, circuline or straightline	U
dewatering screws	M
grit collectors	U
scum breakers	M
slow or rapid mixers	M
sludge collectors	U
thickeners	M
vacuum filters	M
Slab Pushers	M
*Steering Gear	
Stokers	U
Sugar Industry	
**cane knives	M
**crushers	M
**mills	H
Textile Industry	
batchers	M
calendars	M
cards	M
dry cans	M
dryers	M
dyeing machinery	M
*knittingmachines	
looms	M
mangles	M
nappers	M
pads	M
*range drives	
slashers	M
soapers	M
spinners	M
tenter frames	M
washers	M
winders	M
*Windlass	

For machines not listed above, please consult us

Remarks: * --Refer to factory.
**--To be selected on basis of 24 hrs. service only.

Nomenclature

X F ☐ K 4 – 15 – 2.2 – 4 – ☐

- ☐ → Suffix Designation
- 4 → Number(s) of Poles
- 2.2 → Input Power (kW)
- 15 → Transmission Ratio
- 4 → Frame Size of Gear Unit
- K → Type of Input Unit
- ☐ → Stage
- F → Type
- X → FORCE X-Series

Type of Input Unit

(-) Adapter with input shaft

K Adapter for IEC flange motors

D With manufactured motors

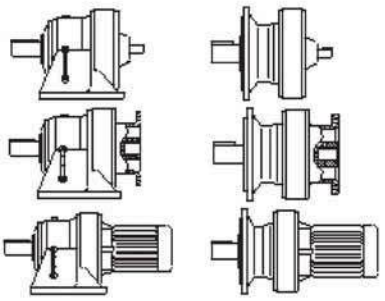

Stage

(-) Single-stage

E Double-stage

S Three-stage

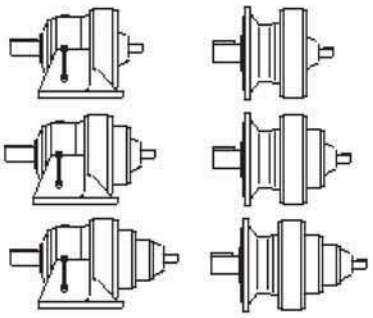

Type

(-) Foot-mounted

F Flange-mounted

R Agitator flange

FR Flange-mounted (With Reinforced Bearing)

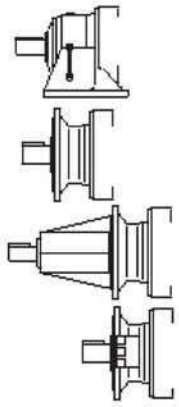

Suffix Designation

(-) None

B With Brake

BS With Backstop

V With Variable speed

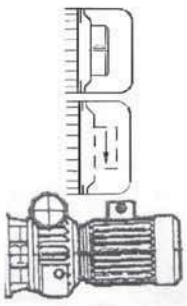

Number of Starts-Stops and Load Factor

Number of starts-stops (Times/hour)	~3 hours/day			~10 hours/day			~24 hours/day		
	U	M	H	U	M	H	U	M	H
~10	1.20	1.50	1.80	1.50	1.65	2.00	1.80	1.90	2.25
~200	1.30	1.65	1.95	1.65	1.95	2.25	1.90	2.25	2.50
~500	1.35	1.80	2.10	1.75	2.20	2.40	1.95	2.40	2.65

Note: **U** - uniform load, **M** - moderate shock load, **H** - heavy shock load

Product Structure

The product is designed according to the less differential planetary transmission theory. It mainly consists of four parts.



1. The pivoted arm:
The arm consists of the input shaft and the eccentric locking collar. The decentration of the eccentric locking collar is 180°. There equips two roller bearings between the cycloidal wheel and the eccentric locking collar to reduce the friction.

2. The cycloidal wheel:
The shape of the gear teeth is the equidistant curve of the short external para-cycloid. To reach the input static balance and improve the transmission bearing capacity, a pair of cycloidal wheels, which are exactly the same, are adopted, mounted on the eccentric locking collar separately. The two wheels form an angle of 180°.

3. The pin wheel:
The wheel consists of a needle gear shell and the gear pin in the equidistributed pinhole of the shell. A pin bush in the gear pin can be used to decrease the mesh frictional loss.

4. The W frame work:
The W framework usually refers to the part consisting of the output shaft, pin shaft and the cycloidal wheel. The output shaft and the cycloidal wheel are connected with the pin shaft. One end of the pin shaft is fixed in the output shaft flange, and the other end, into the equidistributed pinhole between the two cycloidal wheels. A pin bush is applied on the hanging arm of the pin shaft to decrease the frictional loss.

Model

Single-stage	Model	1	1C	2	2C	3	3C	4	4C	5	5C	6	7	8	9	10	11	12N	13N	14N
Double-stage		31	42	53	63	74	84	85	95	106	116	117								
Triple-stage		531	642	742	842	852	853	952	953	1063	1164	1174								

Single-Stage Transmission Ratio

7	9	11	13	15	17	19	21	23
25	29	35	43	47	59	71	87	119

RATIO of Double Stage 11 sizes 155 ranges

121	11 x 11
133	19 x 7
135	15 x 9
143	13 x 11
147	21 x 7
153	17 x 9
161	23 x 7
165	15 x 11
169	13 x 13
171	19 x 9
175	25 x 7
187	17 x 11
189	21 x 9
195	15 x 13
203	29 x 7

207	23 x 9
209	19 x 11
221	17 x 13
225	25 x 9
231	21 x 11
245	35 x 7
247	19 x 13
253	23 x 11
255	17 x 15
261	29 x 9
273	21 x 13
275	25 x 11
285	19 x 15
289	17 x 17
299	23 x 13

301	43 x 7
315	21 x 15
319	29 x 11
323	19 x 17
325	25 x 13
329	47 x 7
345	23 x 15
357	21 x 17
361	19 x 19
375	25 x 15
377	29 x 13
385	35 x 11
387	43 x 9
391	23 x 17
399	21 x 19

413	59 x 7
423	47 x 9
425	25 x 17
435	29 x 15
437	23 x 19
441	21 x 21
455	35 x 13
473	43 x 11
475	25 x 19
483	23 x 21
493	29 x 17
497	71 x 7
517	47 x 11
525	35 x 15
529	23 x 23

531	59 x 9
551	29 x 19
559	43 x 13
575	25 x 23
595	35 x 17
609	29 x 21
611	47 x 13
625	25 x 25
639	71 x 9
645	43 x 15
649	59 x 11
665	35 x 19
667	29 x 23
705	47 x 15
725	29 x 25

731	43 x 17
735	35 x 21
767	59 x 13
781	71 x 11
783	87 x 9
799	47 x 17
805	35 x 23
817	43 x 19
833	119 x 7
875	35 x 25
885	59 x 15
893	47 x 19
903	43 x 21
923	71 x 13
957	87 x 11

987	47 x 21
989	43 x 23
1003	59 x 17
1015	35 x 29
1065	71 x 15
1071	119 x 9
1075	43 x 25
1081	47 x 23
1121	59 x 19
1175	47 x 25
1207	71 x 17
1225	35 x 35
1239	59 x 21
1247	43 x 29
1305	87 x 15

1309	119 x 11
1349	71 x 19
1357	59 x 23
1363	47 x 29
1475	59 x 25
1479	87 x 17
1491	71 x 21
1505	43 x 35
1521	39 x 39
1547	119 x 13
1633	71 x 23
1645	47 x 35
1653	87 x 19
1711	59 x 29
1775	71 x 25

1785	119 x 15
1827	87 x 21
1849	43 x 43
2001	87 x 23
2021	47 x 43
2023	119 x 17
2059	71 x 29
2065	59 x 35
2175	87 x 25
2209	47 x 47
2261	119 x 19
2485	71 x 35
2499	119 x 21
2523	87 x 29
2737	119 x 23

2773	59 x 47
2975	119 x 25
3045	87 x 35
3053	71 x 43
3337	71 x 47
3451	119 x 29
3481	59 x 59
3741	87 x 43
4089	87 x 47
4165	119 x 35
4189	71 x 59
5041	71 x 71
5117	119 x 43
5133	87 x 59
5593	119 x 47

6177	87 x 71
7021	119 x 59
7569	87 x 87
8449	119 x 71
10353	119 x 87

Triple-Stage Transmission Ratio

5841 (59 x 11 x 9)	14993 (47 x 29 x 11)	31211 (59 x 23 x 23)	58029 (87 x 29 x 23)	118059 (87 x 59 x 23)
6003 (29 x 23 x 9)	15341 (29 x 23 x 23)	31329 (59 x 59 x 9)	58351 (59 x 43 x 23)	118581 (87 x 47 x 29)
6545 (35 x 17 x 11)	15399 (59 x 29 x 9)	31433 (43 x 43 x 17)	58609 (47 x 43 x 29)	119239 (59 x 47 x 43)
6579 (43 x 17 x 9)	16269 (87 x 17 x 11)	33495 (87 x 35 x 11)	59177 (59 x 59 x 17)	121401 (71 x 59 x 29)
6647 (23 x 17 x 17)	16555 (43 x 35 x 11)	33583 (71 x 43 x 11)	59711 (71 x 29 x 29)	121835 (59 x 59 x 35)
7029 (17 x 11 x 9)	16641 (43 x 43 x 9)	33669 (87 x 43 x 9)	59885 (59 x 35 x 29)	128673 (87 x 87 x 17)
7047 (87 x 9 x 9)	16813 (43 x 23 x 17)	34017 (87 x 23 x 17)	63597 (87 x 43 x 17)	130331 (59 x 47 x 47)
7139 (59 x 11 x 11)	17051 (59 x 17 x 17)	34357 (47 x 43 x 17)	63779 (59 x 47 x 23)	130935 (87 x 43 x 35)
7191 (47 x 17 x 9)	17255 (35 x 29 x 17)	34615 (43 x 35 x 23)	64061 (47 x 47 x 29)	131279 (71 x 43 x 43)
7245 (35 x 23 x 9)	17963 (71 x 23 x 11)	35003 (71 x 29 x 17)	64715 (43 x 43 x 35)	142071 (87 x 71 x 23)
7337 (29 x 23 x 11)	18009 (87 x 23 x 9)	35105 (59 x 35 x 17)	67947 (87 x 71 x 11)	143115 (87 x 47 x 35)
7569 (29 x 29 x 9)	18095 (47 x 35 x 11)	35525 (35 x 35 x 29)	68121 (87 x 87 x 9)	143491 (71 x 47 x 43)
8041 (43 x 17 x 11)	18189 (47 x 43 x 9)	36163 (43 x 29 x 29)	69513 (87 x 47 x 17)	146189 (71 x 71 x 29)
8381 (29 x 17 x 17)	18377 (47 x 23 x 17)	36707 (71 x 17 x 11)	70035 (87 x 35 x 23)	146615 (71 x 59 x 35)
8591 (71 x 11 x 11)	18515 (35 x 23 x 23)	36801 (87 x 47 x 9)	70219 (71 x 43 x 23)	148857 (87 x 59 x 29)
8613 (87 x 11 x 9)	18585 (59 x 35 x 9)	37553 (47 x 47 x 17)	70735 (47 x 43 x 35)	149683 (59 x 59 x 43)
8789 (47 x 17 x 11)	18821 (59 x 29 x 11)	37701 (71 x 59 x 9)	71213 (71 x 59 x 17)	156839 (71 x 47 x 47)
8855 (35 x 23 x 11)	19343 (29 x 29 x 23)	37835 (47 x 35 x 23)	72065 (71 x 35 x 29)	160863 (87 x 43 x 43)
8901 (43 x 23 x 9)	19881 (47 x 47 x 9)	38291 (59 x 59 x 11)	72275 (59 x 35 x 35)	163607 (59 x 59 x 47)
8993 (23 x 23 x 17)	20339 (43 x 43 x 11)	39353 (59 x 59 x 23)	73167 (87 x 29 x 29)	174087 (87 x 87 x 23)
9027 (59 x 17 x 9)	20519 (71 x 17 x 17)	39527 (47 x 29 x 29)	73573 (59 x 43 x 29)	175827 (87 x 47 x 43)
9135 (35 x 29 x 9)	20825 (35 x 35 x 17)	41151 (87 x 43 x 11)	76751 (71 x 43 x 23)	176435 (71 x 71 x 35)
9251 (29 x 29 x 11)	21199 (43 x 29 x 17)	42245 (71 x 35 x 17)	77315 (47 x 47 x 35)	179133 (87 x 71 x 29)
9729 (47 x 23 x 9)	22011 (87 x 23 x 11)	42527 (43 x 43 x 23)	79507 (43 x 43 x 43)	179655 (87 x 59 x 35)
10115 (35 x 17 x 17)	22231 (47 x 43 x 11)	42875 (35 x 35 x 35)	80063 (59 x 59 x 23)	180127 (71 x 59 x 43)
10527 (87 x 11 x 11)	22365 (71 x 35 x 9)	43129 (59 x 43 x 17)	80417 (59 x 47 x 29)	192183 (87 x 47 x 47)
10863 (71 x 17 x 9)	22649 (71 x 29 x 11)	43645 (43 x 35 x 29)	83259 (87 x 87 x 11)	196883 (71 x 59 x 47)
10879 (43 x 23 x 11)	22707 (87 x 29 x 9)	44979 (87 x 47 x 11)	85697 (71 x 71 x 17)	205379 (59 x 59 x 59)
11025 (35 x 35 x 9)	22833 (59 x 43 x 9)	45369 (71 x 71 x 9)	86043 (87 x 43 x 23)	216195 (87 x 71 x 35)
11033 (59 x 17 x 11)	23069 (59 x 23 x 17)	46023 (87 x 23 x 23)	86903 (47 x 43 x 43)	216763 (71 x 71 x 43)
11165 (35 x 29 x 11)	23171 (47 x 29 x 17)	46179 (87 x 59 x 9)	87261 (87 x 59 x 17)	219501 (87 x 87 x 29)
11223 (43 x 29 x 9)	23345 (35 x 25 x 23)	46483 (47 x 43 x 23)	88305 (87 x 35 x 29)	220719 (87 x 59 x 43)
11339 (29 x 23 x 17)	24299 (47 x 47 x 11)	47141 (59 x 47 x 17)	88537 (71 x 43 x 29)	236927 (71 x 71 x 47)
11891 (47 x 23 x 11)	24389 (29 x 29 x 29)	47357 (71 x 29 x 23)	88795 (59 x 43 x 35)	241251 (87 x 59 x 47)
12167 (23 x 23 x 23)	24863 (47 x 23 x 23)	47495 (59 x 35 x 23)	94047 (87 x 47 x 23)	247151 (71 x 59 x 59)
12213 (59 x 23 x 9)	24957 (59 x 47 x 9)	47705 (47 x 35 x 29)	94987 (47 x 47 x 43)	264915 (87 x 87 x 35)
12267 (47 x 29 x 9)	25143 (87 x 17 x 17)	49619 (59 x 29 x 29)	96347 (71 x 59 x 23)	265611 (87 x 71 x 43)
12427 (43 x 17 x 17)	25585 (43 x 35 x 17)	50807 (47 x 47 x 23)	96773 (71 x 47 x 29)	290319 (87 x 71 x 47)
13277 (71 x 17 x 11)	27335 (71 x 35 x 11)	51765 (87 x 35 x 17)	97055 (59 x 47 x 35)	297419 (71 x 71 x 59)
13311 (87 x 17 x 9)	27405 (87 x 35 x 9)	51901 (71 x 43 x 17)	100949 (59 x 29 x 29)	302847 (87 x 59 x 59)
13475 (35 x 35 x 11)	27477 (71 x 43 x 9)	52675 (43 x 35 x 35)	103823 (47 x 47 x 47)	325467 (87 x 87 x 43)
13545 (43 x 35 x 9)	27753 (87 x 29 x 11)	53621 (43 x 43 x 29)	105009 (87 x 71 x 17)	355743 (87 x 87 x 47)
13583 (47 x 17 x 17)	27907 (59 x 43 x 11)	55451 (71 x 71 x 11)	106575 (87 x 35 x 35)	357911 (71 x 71 x 71)
13685 (35 x 23 x 17)	27965 (47 x 35 x 17)	55593 (87 x 71 x 9)	106855 (71 x 43 x 35)	364443 (87 x 71 x 59)
13717 (43 x 29 x 11)	28681 (43 x 29 x 23)	56463 (87 x 59 x 11)	108489 (87 x 43 x 29)	438567 (87 x 71 x 71)
14297 (29 x 29 x 17)	29087 (59 x 29 x 17)	56729 (71 x 47 x 17)	109091 (59 x 43 x 43)	446571 (87 x 87 x 59)
14697 (71 x 23 x 9)	29435 (35 x 29 x 29)	57155 (71 x 35 x 23)	115943 (71 x 71 x 23)	537399 (87 x 87 x 71)
14805 (47 x 35 x 9)	30033 (71 x 47 x 9)	57575 (47 x 35 x 35)	116795 (71 x 147 x 35)	658503 (87 x 87 x 87)
14927 (59 x 23 x 11)	30503 (59 x 47 x 11)			

Note: Triple-stage is combined by 3 single-stages.The principle combination is the high speed end is the low transmission ratio, the other is the high transmission ratio.

The Mainly Technical Parameter of Single-Stage Reducer

Model X	Ratio	7	9	11	13	15	17	19	21	23	25	29	35	43	47	59	71	87	119
1	Permitted torque (Nm)	------	56	69													------		
	Overhung force (N)	------	552	685		785			878			990					------		
1C	Permitted torque (Nm)	58	69	80	92	103	110	116	120	116	110		100	123		116	110		------
	Overhung force (N)	2140	2360	2510	2700		2910		3010			2970	3050	3040	3010	2970	3200		------
2	Permitted torque (Nm)	96		118		147													------
	Overhung force (N)	1305		1630		1860			2000			2340		2450		2650	2890		------
2C	Permitted torque (Nm)	120	146	178	206	243	214	233	251	197	214	236	214	238	187	210	204	223	------
	Overhung force (N)	3560	3920	4150	4480		4820		5300										------
3	Permitted torque (Nm)	160		196		245													------
	Overhung force (N)	1752		2190		2500			2700			3150		3550		3970	4272		------
3C	Permitted torque (Nm)	238	269	329	378	439	478	494	509	441	481	496	510	497	470	487	411	482	------
	Overhung force (N)	5420	5960	6320	6810		7330		8070			9240							------
4	Permitted torque (Nm)	392		490															
	Overhung force (N)	2712		3390		3880			4170			4880		5120		6130	6630		
4C	Permitted torque (Nm)	537		656	750	843	932	891	851	810	880	912	944	884	824	1002	892	1016	------
	Overhung force (N)	8810	9690	10290	11080		11944		13120			13930	14990	15690					------
5	Permitted torque (Nm)	628		785		981													
	Overhung force (N)	3872		4840		5550			5980			6990		7890		8810	9500		
5C	Permitted torque (Nm)	958		1171	1332	1324	1533	1598	1663	1597	1740	1690	1818	1696	1664	1703	1732	1729	------
	Overhung force (N)	9600	10600	11200	12100		13000		14300			15200	16400	17100	18000	19200			------
6	Permitted torque (Nm)	------	1255	1569		1961													------
	Overhung force (N)	------	5240	6550		7550			8080			9440		10650		11900	12800		------
7	Permitted torque (Nm)	------	1726	2157		2648													------
	Overhung force (N)	------	7040	8800		10050			11950			12700		13650		16000	17250		------
8	Permitted torque (Nm)	------	2824	3530		4217			4413										------
	Overhung force (N)	------	10080	12600		17100			18150			20900		21550		22900	24700	27050	------
9	Permitted torque (Nm)	------	4628	5786		6962			7845				8825				7845		------
	Overhung force (N)	------	21320	26650		28500			32850		36550		38300	40500			43200		------
10	Permitted torque (Nm)	------	6119	7649		9218			10296				11767						------
	Overhung force (N)	------	26720	33400		39000						45850	48100	50750	51500	54300	59200		------
11	Permitted torque (Nm)	----------				13728			16670				19612						
	Overhung force (N)	----------				49400			52600			58100	60850	64300		68700	74850		
12N	Permitted torque (Nm)	------		11544	------	15351	------		17811	------		18046	------	21481	------	20447	------	20604	------
	Overhung force (N)	------		85200	------	91100	------		102000	------		112000	------	126000	------	138000	------	157000	------
13N	Permitted torque (Nm)	------		14007	------	18989	------		21982	------		24618	------	26109	------	29297	------	26409	------
	Overhung force (N)	------		104000	------	112000	------		124000	------		137000	------	155000	------	170000	------	192000	------
14N	Permitted torque (Nm)	------		16782	------	22923	------		26673	------		35192	------	36561	------	39445	------	35242	------
	Overhung force (N)	------		128000	------	137000	------		152000	------		168000	------	189000	------	207000	------	234000	------

The Mainly Technical Parameter of Double-Stage Reducer

Model	Overhung force	Ratio	121	187	289	319	473	595	731	841	1003	1225	1505	1849	2065	2537	3481	5133
		Output speed (r/min)	12.4	8.0	5.2	4.7	3.2	2.5	2.0	1.8	1.5	1.2	1.0	0.8	0.7	0.6	0.4	0.3
XE	(N)	Output power (kW)	Permitted torque (Nm)															
31		0.25	196	245														
42	7280	0.37	490															
53	11940		785	981														
63	14060		1569	1961														
53	11940	0.55	785	981														
63	14060		1569	1961														
53	11940	0.75	785	981														
63	14060		1569	1961														
74	18900		2157	2648														
84	27050		3530	4217		4413												
53	11940	1.1	785	981														
63	14060		1569	1961														
74	18900		2157	2648														
84	27050		3530	4217		4413												
63	14060	1.5	1569	1961														
74	18900		2157	2648														
84	27050		3530	4217		4413												
85																		
95	47140		5786	6962	7845	8825				7845	8825							7845
74	18900	2.2	2157	2648														
84	27050		3530	4217		4413												
85																		
95	47140		5786	6962	7845	8825				7845	8825							7845
106	59200		7649	9218	10296	11767				10296	11767							10296
74	18900	3.0	2157	2648														
84	27050		3530	4217		4413												
85																		
95	47140		5786	6962	7845	8825				7845	8825							7845
106	59200		7649	9218	10296	11767				10296	11767							10296

The Mainly Technical Parameter of Double-Stage Reducer (Continued)

Frame Size XE	Overhung force (N)	Ratio	121	187	289	319	473	595	731	841	1003	1225	1505	1849	2065	2537	3481	5133
		Output speed (r/min)	12.4	8.0	5.2	4.7	3.2	2.5	2.0	1.8	1.5	1.2	1.0	0.8	0.7	0.6	0.4	0.3
		Output power (kW)	Permitted torque (Nm)															
74	18900	4.0	2157	2648														
84	27050		3530	4217	4413													
85																		
95	47140		5786	6962		7845		8825		7845		8825						7845
106	59200		7649	9218		10296		11767		10296		11767						10296
117	74870		----------	13728		16670		19612		16670		19612						
85	27050	5.5	3530	4217	4413													
95	47140		5786	6962		7845		8825		7845		8825						7845
106	59200		7649	9218		10296		11767		10296		11767						10296
117	74870		----------	13728		16670		19612		16670		19612						
95	47140	7.5	5786	6962		7845		8825		7845		8825						7845
106	59200		7649	9218		10296		11767		10296		11767						10296
117	74870		----------	13728		16670		19612		16670		19612						
106	59200	11.0	7649	9218		10296		11767		10296		11767						10296
117	74870		----------	13728		16670		19612		16670		19612						

The Mainly Technical Parameter of Triple-Stage Reducer

Model	XS	642	742	842	852	853	952	953	1063	1164	1174
Permitted torque (Nm)		2255	2648	4413			8825		11767	19612	21560
Overhung force (N)		12500	14700	39200			58800		68600	89000	98000

Symbol Description

P_{Motor} = Rated power of motor

(50Hz) = at mains frequency 50 Hz
(60Hz) = at mains frequency 60 Hz

n_2 = Output speed of gear unit

T_2 = Output torque of gear unit

f_B = Service factor of the drive

i_{ges} = Total ratio of gear unit

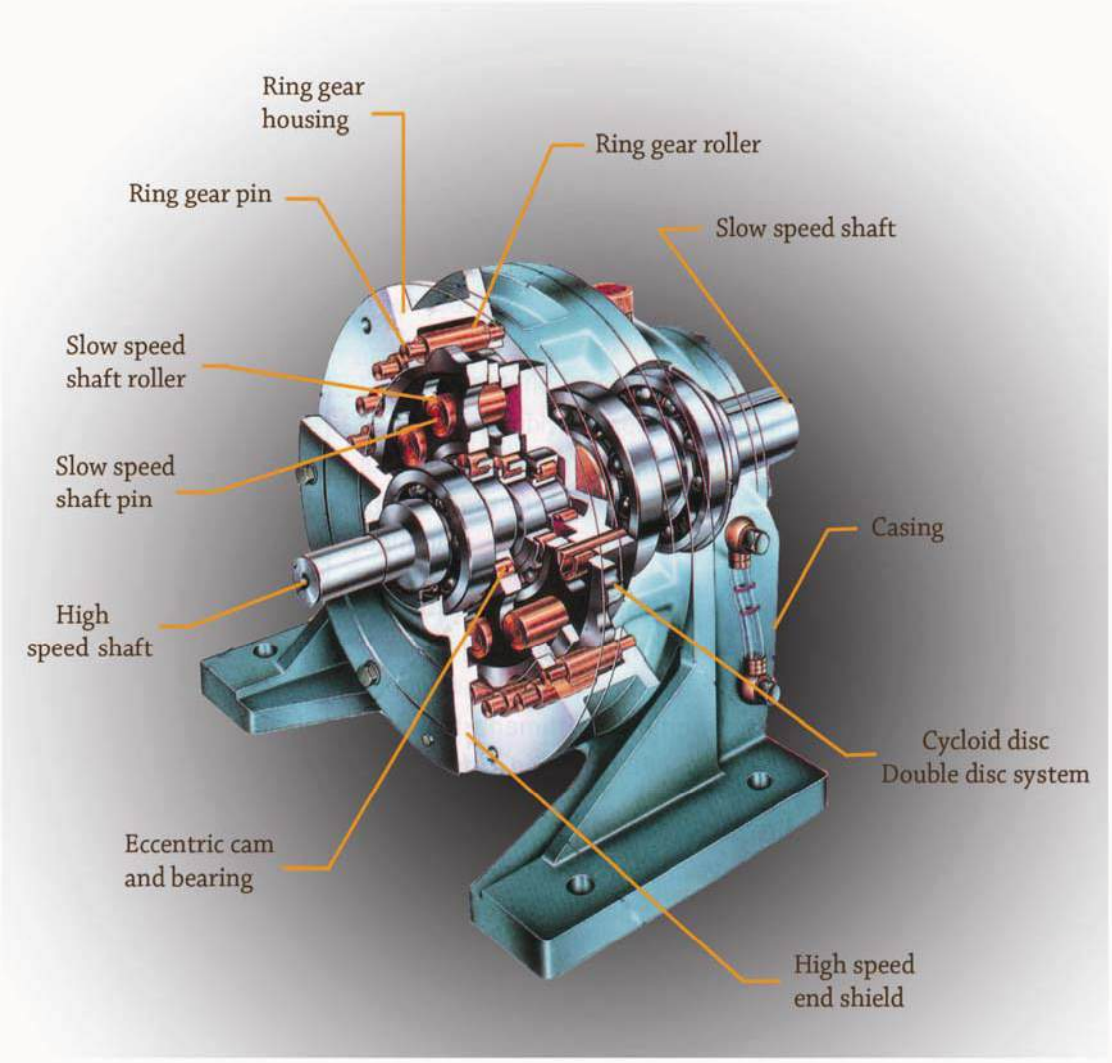

Selection for FORCE Cycloidal Speed Reducer

P_{Motor} [kW]	n_2(50Hz) [1/min]	T_2 [Nm]	f_B [-]	i_{ges} [-]	Model / Frame Size
0.25 kW (50Hz)	**0.07**	27452	0.71	20339	**XS.1164-(71M4A)**
0.30 kW (60Hz)	**0.08**	22344	0.88	16555	
	0.09	20147	0.97	14927	
	0.10	18395	1.07	13629	
	0.12	15960	1.23	11825	
	0.14	13058	1.50	9675	
	0.18	11044	1.78	7569	**XE.117-(71M4A)**
	0.23	9013	2.18	6177	
	0.27	7490	2.62	5133	
	0.28	7356	2.67	5041	
	0.33	6112	3.21	4189	
	0.37	5459	3.59	3741	
	0.40	5079	3.86	3481	
	0.42	4869	4.03	3337	
	0.46	4455	4.40	3053	
	0.50	4046	4.85	2773	
	0.40	5079	2.32	3481	**XE.106-(71M4A)**
	0.42	4869	2.42	3337	
	0.46	4443	2.65	3045	
	0.50	4046	2.91	2773	
	0.55	3681	3.20	2523	
	0.68	3013	3.91	2065	
	0.50	4046	2.18	2773	**XE.95-(71M4A)**
	0.55	3681	2.13	2523	
	0.56	3626	2.16	2485	
	0.64	3174	2.47	2175	
	0.68	3013	2.93	2065	
	0.70	2920	2.69	2001	
	0.76	2698	3.27	1849	
	0.86	2383	3.29	1633	
	0.95	2152	4.10	1475	
	1.0	1980	4.46	1357	
	1.1	1820	4.85	1247	
	1.2	1636	5.40	1121	
	0.63	3223	1.37	2209	**XE.84-(71M4A)**
	0.69	2949	1.50	2021	
	0.79	2590	1.70	1775	
	0.86	2383	1.85	1633	
	0.95	2152	2.05	1475	
	1.0	1980	2.23	1357	
	1.1	1820	2.43	1247	
	1.2	1714	2.57	1175	
	1.3	1554	2.84	1065	
	1.4	1440	3.06	987	
	1.6	1291	3.42	885	
	1.7	1175	3.76	805	
	1.9	1067	4.14	731	
	2.0	1029	4.29	705	
	0.95	2152	1.23	1475	**XE.74-(71M4A)**
	1.0	1980	1.34	1357	
	1.2	1714	1.54	1175	
	1.3	1554	1.70	1065	



P_{Motor} [kW]	n_2(50Hz) [1/min]	T_2 [Nm]	f_B [-]	i_{ges} [-]	Model / Frame Size
0.25 kW (50Hz)	**1.4**	1440	1.84	987	**XE.74-(71M4A)**
0.30 kW (60Hz)	**1.7**	1175	2.25	805	
	1.9	1067	2.48	731	
	2.1	970	2.73	665	
	2.2	932	2.84	639	
	2.3	889	2.98	609	
	2.4	839	3.16	575	
	2.5	816	3.25	559	
	2.6	775	3.42	531	
	2.7	754	3.51	517	
	2.8	719	3.68	493	
	1.3	1554	1.26	1065	**XE.63-(71M4A)**
	1.4	1440	1.36	987	
	1.7	1175	1.67	805	
	1.9	1067	1.84	731	
	2.1	970	2.02	665	
	2.2	932	2.10	639	
	2.3	889	2.21	609	
	2.4	839	2.34	575	
	2.5	816	2.40	559	
	2.6	775	2.53	531	
	2.8	719	2.73	493	
	3.0	690	2.84	473	
	3.2	638	3.08	437	
	3.4	603	3.25	413	
	3.6	571	3.44	391	
	3.9	521	3.76	357	
	4.1	503	3.90	345	
	4.3	480	4.08	329	
	4.7	439	4.46	301	
	4.9	416	4.72	285	
	5.1	401	4.89	275	
	5.5	372	5.27	255	
	5.7	357	5.49	245	
	2.6	775	1.27	531	**XE.53-(71M4A)**
	2.8	719	1.36	493	
	3.0	690	1.42	473	
	3.2	638	1.54	437	
	3.4	603	1.63	413	
	3.6	571	1.72	391	
	3.9	521	1.88	357	
	4.1	503	1.95	345	
	4.3	480	2.04	329	
	4.7	439	2.23	301	
	4.9	416	2.36	285	
	5.1	401	2.44	275	
	5.5	372	2.64	255	
	5.7	357	2.74	245	
	6.1	337	2.91	231	
	6.3	322	3.04	221	
	6.9	296	3.31	203	
	7.2	285	3.45	195	



P_{Motor} [kW]	n_2(50Hz) [1/min]	T_2 [Nm]	f_B [-]	i_{ges} [-]	Model / Frame Size
0.25 kW (50Hz)	**7.5**	273	3.60	187	**XE.53-(71M4A)**
0.30 kW (60Hz)	**8.0**	255	3.84	175	
	8.2	250	3.93	171	
	8.5	241	4.07	165	
	8.7	235	4.18	161	
	9.2	223	4.39	153	
	9.5	214	4.57	147	
	9.8	209	3.76	143	
	10.4	197	4.98	135	
	5.1	401	1.22	275	**XE.42-(71M4A)**
	5.5	372	1.32	255	
	5.7	357	1.37	245	
	6.1	337	1.45	231	
	6.3	322	1.52	221	
	6.9	296	1.65	203	
	7.2	285	1.72	195	
	7.5	273	1.80	187	
	8.0	255	1.92	175	
	8.2	250	1.96	171	
	8.5	241	2.04	165	
	8.7	235	2.09	161	
	9.2	223	2.19	153	
	9.5	214	2.28	147	
	9.8	209	2.35	143	
	10.4	197	2.49	135	
	11.6	177	2.78	121	
	11.8	188	2.61	119	**X.4-(71M4A)**
	16.1	137	3.57	87	
	10.4	197	1.24	135	**XE.31-(71M4A)**
	16.1	137	3.50	87	**X.3C-(71M4A)**
	19.7	112	3.68	71	
	19.7	112	2.19	71	**X.3-(71M4A)**
	24	93	2.63	59	
	30	74	3.30	47	
	33	68	3.61	43	
	16.1	137	1.86	87	**X.2C-(71M4A)**
	19.7	112	1.87	71	
	24	93	2.29	59	
	30	74	2.51	47	
	33	68	3.51	43	
	30	74	1.98	47	**X.2-(71M4A)**
	33	68	2.17	43	
	40	55	2.66	35	
	48	46	3.21	29	
	56	39	3.73	25	
	61	36	4.05	23	
	67	33	4.44	21	
	24	93	1.25	59	**X.1C-(71M4A)**
	33	68	1.89	43	
	40	55	2.19	35	
	48	46	2.56	29	
	56	39	2.81	25	



P_{Motor} [kW]	n_2(50Hz) [1/min]	T_2 [Nm]	f_B [-]	i_{ges} [-]	Model / Frame Size
0.25 kW (50Hz)	**67**	33	3.68	21	**X.1C-(71M4A)**
0.30 kW (60Hz)	**40**	55	1.25	35	**X.1-(71M4A)**
	48	46	1.51	29	
	56	39	1.75	25	
	61	36	1.90	23	
	67	33	2.08	21	
	74	30	2.30	19	
	82	27	2.57	17	
	93	24	2.92	15	
	108	21	3.36	13	
	127	17	3.98	11	
	156	14	3.94	9	
0.37 kW (50Hz)	**0.18**	16346	1.20	7569	**XE.117-(71M4B)**
0.44 kW (60Hz)	**0.23**	13339	1.47	6177	
	0.27	11085	1.77	5133	
	0.28	10886	1.80	5041	
	0.33	9046	2.17	4189	
	0.34	8830	2.22	4089	
	0.37	8079	2.43	3741	
	0.40	7517	2.61	3481	
	0.42	7206	2.72	3337	
	0.46	6593	2.97	3053	
	0.50	5988	3.28	2773	
	0.55	5449	3.60	2523	
	0.64	4697	4.18	2175	
	0.68	4459	4.40	2065	
	0.70	4321	4.54	2001	
	0.76	3993	4.91	1849	
	0.82	3695	5.31	1711	
	0.86	3527	5.56	1633	
	0.40	7517	1.57	3481	**XE.106-(71M4B)**
	0.42	7206	1.63	3337	
	0.46	6593	1.78	3053	
	0.50	5988	1.96	2773	
	0.55	5449	2.16	2523	
	0.64	4697	2.51	2175	
	0.68	4459	2.64	2065	
	0.70	4321	2.72	2001	
	0.76	3993	2.95	1849	
	0.82	3695	3.18	1711	
	0.86	3527	3.34	1633	
	0.95	3185	3.69	1475	
	0.50	5988	1.47	2773	**XE.95-(71M4B)**
	0.55	5449	1.44	2523	
	0.64	4697	1.67	2175	
	0.70	4321	1.82	2001	
	0.76	3993	2.21	1849	
	0.82	3695	2.39	1711	
	0.86	3527	2.22	1633	
	0.95	3185	2.77	1475	
	1.1	2693	3.28	1247	
	1.2	2421	3.65	1121	



P_{Motor} [kW]	n_2(50Hz) [1/min]	T_2 [Nm]	f_B [-]	i_{ges} [-]	Model / Frame Size
0.37 kW (50Hz)	**1.3**	2300	3.41	1065	**XE.95-(71M4B)**
0.44 kW (60Hz)	**1.5**	2067	3.80	957	
	1.6	1911	4.62	885	
	1.7	1738	5.08	805	
	0.86	3527	1.25	1633	**XE.84-(71M4B)**
	0.95	3185	1.39	1475	
	1.1	2695	1.64	1248	
	1.2	2537	1.74	1175	
	1.3	2300	1.92	1065	
	1.4	2131	2.07	987	
	1.5	2067	2.14	957	
	1.7	1738	2.54	805	
	1.9	1579	2.80	731	
	2.1	1440	3.06	667	
	2.3	1315	3.36	609	
	2.7	1134	3.89	525	
	2.8	1073	4.11	497	
	3.1	983	4.49	455	
	1.4	2131	1.24	987	**XE.74-(71M4B)**
	1.5	2067	1.28	957	
	1.6	1911	1.39	885	
	1.7	1738	1.52	805	
	1.9	1579	1.68	731	
	2.1	1440	1.84	667	
	2.3	1315	2.01	609	
	2.7	1134	2.34	525	
	2.8	1073	2.47	497	
	3.1	983	2.69	455	
	3.4	892	2.97	413	
	3.6	844	3.14	391	
	3.7	810	3.27	375	
	3.9	771	3.43	357	
	4.1	745	3.55	345	
	1.9	1579	1.24	731	**XE.63-(71M4B)**
	2.1	1440	1.36	667	
	2.3	1315	1.49	609	
	2.7	1134	1.73	525	
	2.8	1073	1.83	497	
	3.1	983	2.00	455	
	3.4	892	2.20	413	
	3.6	844	2.32	391	
	3.7	810	2.42	375	
	3.9	771	2.54	357	
	4.1	745	2.63	345	
	4.3	710	2.76	329	
	4.7	650	3.02	301	
	5.1	594	3.30	275	
	5.4	564	3.48	261	
	5.7	529	3.71	245	
	6.1	499	3.93	231	
	6.3	477	4.11	221	
	6.9	438	4.47	203	



P_{Motor} [kW]	n_2(50Hz) [1/min]	T_2 [Nm]	f_B [-]	i_{ges} [-]	Model / Frame Size
0.37 kW (50Hz)	**7.5**	404	4.86	187	**XE.63-(71M4B)**
0.44 kW (60Hz)	**8.0**	378	5.19	175	
	8.5	356	5.50	165	
	3.9	771	1.27	357	**XE.53-(71M4B)**
	4.1	745	1.32	345	
	4.3	710	1.38	329	
	4.7	650	1.51	301	
	5.1	594	1.65	275	
	5.4	564	1.74	261	
	5.7	529	1.85	245	
	6.1	499	1.97	231	
	6.3	477	2.06	221	
	6.9	438	2.24	203	
	7.5	404	2.43	187	
	8.0	378	2.60	175	
	8.5	356	2.75	165	
	8.7	348	2.82	161	
	9.2	330	2.97	153	
	9.5	317	3.09	147	
	9.8	309	2.54	143	
	10.4	292	3.36	135	
	11.6	261	3.00	121	
	8.0	378	1.30	175	**XE.42-(71M4B)**
	8.5	356	1.38	165	
	8.7	348	1.41	161	
	9.2	330	1.48	153	
	9.5	317	1.54	147	
	9.8	309	1.59	143	
	10.4	292	1.68	135	
	11.6	261	1.88	121	
	11.8	278	1.76	119	**X.4-(71M4B)**
	16.1	203	2.41	87	
	16.1	203	2.37	87	**X.3C-(71M4B)**
	19.7	166	2.49	71	
	24	138	3.54	59	
	19.7	166	1.48	71	**X.3-(71M4B)**
	24	138	1.78	59	
	30	110	2.23	47	
	33	100	2.44	43	
	40	82	3.00	35	
	48	68	3.62	29	
	16.1	203	1.26	87	**X.2C-(71M4B)**
	19.7	166	1.26	71	
	24	138	1.55	59	
	30	110	1.70	47	
	33	100	2.37	43	
	40	82	2.62	35	
	48	68	3.47	29	
	56	58	3.67	25	
	61	54	3.67	23	
	30	110	1.34	47	**X.2-(71M4B)**
	33	100	1.46	43	



P_{Motor} [kW]	n_2(50Hz) [1/min]	T_2 [Nm]	f_B [-]	i_{ges} [-]	Model / Frame Size
0.37 kW (50Hz)	**40**	82	1.80	35	**X.2-(71M4B)**
0.44 kW (60Hz)	**48**	68	2.17	29	
	56	58	2.52	25	
	61	54	2.74	23	
	67	49	3.00	21	
	74	44	3.31	19	
	82	40	3.70	17	
	93	35	4.20	15	
	108	30	3.89	13	
	33	100	1.28	43	**X.1C-(71M4B)**
	40	82	1.48	35	
	48	68	1.73	29	
	56	58	1.90	25	
	67	49	2.49	21	
	82	40	2.77	17	
	93	35	2.94	15	
	108	30	3.09	13	
	127	26	3.12	11	
	61	54	1.28	23	**X.1-(71M4B)**
	67	49	1.41	21	
	74	44	1.56	19	
	82	40	1.74	17	
	93	35	1.97	15	
	108	30	2.27	13	
	127	26	2.69	11	
	156	21	2.67	9	
0.55 kW (50Hz)	**0.28**	16182	1.21	5041	**XE.117-(80M4A)**
0.66 kW (60Hz)	**0.33**	13447	1.46	4189	
	0.34	13126	1.49	4089	
	0.40	11174	1.76	3481	
	0.42	10712	1.83	3337	
	0.46	9801	2.00	3053	
	0.50	8902	2.20	2773	
	0.55	8099	2.42	2523	
	0.64	6982	2.81	2175	
	0.68	6629	2.96	2065	
	0.82	5493	3.57	1711	
	0.86	5242	3.74	1633	
	0.93	4831	4.06	1505	
	1.0	4356	4.50	1357	
	0.46	9801	1.20	3053	**XE.106-(80M4A)**
	0.50	8902	1.32	2773	
	0.55	8099	1.45	2523	
	0.64	6982	1.69	2175	
	0.68	6629	1.78	2065	
	0.82	5493	2.14	1711	
	0.86	5242	2.24	1633	
	0.93	4831	2.44	1505	
	1.0	4356	2.70	1357	
	1.1	4003	2.94	1247	
	1.2	3599	3.27	1121	
	1.3	3451	3.41	1075	



P_{Motor} [kW]	n_2(50Hz) [1/min]	T_2 [Nm]	f_B [-]	i_{ges} [-]	Model / Frame Size
0.55 kW (50Hz)	**0.68**	6629	1.33	2065	**XE.95-(80M4A)**
0.66 kW (60Hz)	**0.82**	5493	1.61	1711	
	0.86	5242	1.50	1633	
	0.93	4831	1.83	1505	
	1.0	4356	2.03	1357	
	1.1	4003	2.20	1247	
	1.2	3599	2.45	1121	
	1.3	3451	2.56	1075	
	1.5	3072	2.55	957	
	1.6	2841	3.11	885	
	1.8	2514	3.12	783	
	1.9	2327	3.37	725	
	2.2	2083	4.24	649	
	2.5	1794	4.92	559	
	2.7	1685	5.24	525	
	1.3	3451	1.28	1075	**XE.84-(80M4A)**
	1.4	3168	1.39	987	
	1.6	2841	1.55	885	
	1.8	2514	1.76	783	
	1.9	2327	1.90	725	
	2.2	2083	2.12	649	
	2.5	1794	2.46	559	
	2.7	1685	2.62	525	
	3.0	1518	2.91	473	
	3.6	1255	3.52	391	
	3.7	1204	3.67	375	
	3.9	1146	3.85	357	
	4.1	1107	3.98	345	
	4.3	1043	4.23	325	
	4.4	1011	4.36	315	
	2.2	2083	1.27	649	**XE.74-(80M4A)**
	2.5	1794	1.48	559	
	2.7	1685	1.57	525	
	3.0	1518	1.74	473	
	3.6	1255	2.11	391	
	3.7	1204	2.20	375	
	3.9	1146	2.31	357	
	4.1	1107	2.39	345	
	4.3	1043	2.54	325	
	4.4	1011	2.62	315	
	4.7	960	2.76	299	
	5.1	883	3.00	275	
	5.5	812	3.26	253	
	5.7	786	3.37	245	
	6.1	742	3.57	231	
	3.0	1518	1.29	473	**XE.63-(80M4A)**
	3.6	1255	1.56	391	
	3.7	1204	1.63	375	
	3.9	1146	1.71	357	
	4.1	1107	1.77	345	
	4.3	1043	1.88	325	
	4.4	1011	1.94	315	



P_{Motor} [kW]	n_2(50Hz) [1/min]	T_2 [Nm]	f_B [-]	i_{ges} [-]	Model / Frame Size
0.55 kW (50Hz)	**4.7**	960	2.04	299	**XE.63-(80M4A)**
0.66 kW (60Hz)	**5.1**	883	2.22	275	
	5.5	812	2.41	253	
	5.7	786	2.49	245	
	6.1	742	2.64	231	
	6.3	709	2.76	221	
	6.9	652	3.01	203	
	7.2	626	3.13	195	
	7.5	600	3.27	187	
	8.0	562	3.49	175	
	8.5	530	3.70	165	
	8.7	517	3.79	161	
	9.2	491	3.99	153	
	9.5	472	4.16	147	
	9.8	459	3.42	143	
	10.4	433	4.53	135	
	11.6	388	4.04	121	
	5.7	786	1.25	245	**XE.53-(80M4A)**
	6.1	742	1.32	231	
	6.3	709	1.38	221	
	6.9	652	1.51	203	
	7.2	626	1.57	195	
	7.5	600	1.63	187	
	8.0	562	1.75	175	
	8.5	530	1.85	165	
	8.7	517	1.90	161	
	9.2	491	2.00	153	
	9.5	472	2.08	147	
	9.8	459	1.71	143	
	10.4	433	2.26	135	
	11.6	388	2.02	121	
	11.8	413	2.38	119	**X.5-(80M4A)**
	16.1	302	3.25	87	
	19.7	246	3.98	71	
	11.6	388	1.26	121	**XE.42-(80M4A)**
	16.1	302	1.62	87	**X.4-(80M4A)**
	19.7	246	1.99	71	
	24	205	2.39	59	
	30	163	3.00	47	
	33	149	3.28	43	
	40	121	4.03	35	
	48	101	4.87	29	
	16.1	302	1.59	87	**X.3C-(80M4A)**
	19.7	246	1.67	71	
	24	205	2.38	59	
	30	163	2.89	47	
	33	149	3.33	43	
	24	205	1.20	59	**X.3-(80M4A)**
	30	163	1.50	47	
	33	149	1.64	43	
	40	121	2.02	35	
	48	101	2.43	29	



P_{Motor} [kW]	n_2(50Hz) [1/min]	T_2 [Nm]	f_B [-]	i_{ges} [-]	Model / Frame Size
0.55 kW (50Hz)	**56**	87	2.82	25	**X.3-(80M4A)**
0.66 kW (60Hz)	**61**	80	3.07	23	
	67	73	3.36	21	
	74	66	3.72	19	
	82	59	4.15	17	
	24	205	1.04	59	**X.2C-(80M4A)**
	30	163	1.14	47	
	33	149	1.59	43	
	40	121	1.76	35	
	48	101	2.34	29	
	56	87	2.47	25	
	61	80	2.47	23	
	67	73	3.44	21	
	82	59	3.63	17	
	40	121	1.21	35	**X.2-(80M4A)**
	48	101	1.46	29	
	56	87	1.69	25	
	61	80	1.84	23	
	67	73	2.02	21	
	74	66	2.23	19	
	82	59	2.49	17	
	93	52	2.82	15	
	108	45	2.62	13	
	127	38	3.09	11	
	156	31	3.07	9	
	200	24	3.95	7	
	40	121	1.00	35	**X.1C-(80M4A)**
	48	101	1.16	29	
	56	87	1.28	25	
	67	73	1.67	21	
	82	59	1.86	17	
	93	52	1.98	15	
	108	45	2.08	13	
	127	38	2.10	11	
	93	52	1.33	15	**X.1-(80M4A)**
	108	45	1.53	13	
	127	38	1.81	11	
	156	31	1.79	9	
0.75 kW (50Hz)	**0.37**	16376	1.20	3741	**XE.117-(80M4B)**
0.90 kW (60Hz)	**0.40**	15238	1.29	3481	
	0.42	14608	1.34	3337	
	0.46	13329	1.47	3045	
	0.50	12139	1.62	2773	
	0.56	10878	1.80	2485	
	0.64	9521	2.06	2175	
	0.68	9039	2.17	2065	
	0.70	8759	2.24	2001	
	0.76	8094	2.42	1849	
	0.82	7490	2.62	1711	
	0.86	7148	2.74	1633	
	0.93	6588	2.98	1505	
	1.0	5940	3.30	1357	



P_{Motor} [kW]	n_2(50Hz) [1/min]	T_2 [Nm]	f_B [-]	i_{ges} [-]	Model / Frame Size
0.75 kW (50Hz)	**1.2**	4907	4.00	1121	**XE.117-(80M4B)**
0.90 kW (60Hz)	**1.4**	4443	4.41	1015	
	1.6	3953	4.96	903	
	0.64	9521	1.24	2175	**XE.106-(80M4B)**
	0.68	9039	1.30	2065	
	0.70	8759	1.34	2001	
	0.76	8094	1.45	1849	
	0.82	7490	1.57	1711	
	0.86	7148	1.65	1633	
	0.93	6588	1.79	1505	
	1.0	5940	1.98	1357	
	1.2	4907	2.40	1121	
	1.4	4443	2.65	1015	
	1.6	3953	2.98	903	
	1.8	3357	3.50	767	
	1.9	3200	3.68	731	
	0.93	6588	1.34	1505	**XE.95-(80M4B)**
	1.0	5940	1.49	1357	
	1.2	4907	1.80	1121	
	1.4	4443	1.99	1015	
	1.6	3953	2.23	903	
	1.8	3357	2.63	767	
	1.9	3200	2.76	731	
	2.2	2841	3.11	649	
	2.5	2447	3.61	559	
	2.8	2176	3.61	497	
	3.1	1992	4.43	455	
	3.4	1808	4.88	413	
	1.8	3357	1.31	767	**XE.84-(80M4B)**
	1.9	3200	1.38	731	
	2.2	2841	1.55	649	
	2.5	2447	1.80	559	
	2.7	2263	1.95	517	
	2.8	2176	2.03	497	
	3.1	1992	2.22	455	
	3.3	1852	2.38	423	
	3.4	1808	2.44	413	
	4.1	1510	2.92	345	
	4.7	1318	3.35	301	
	5.1	1195	3.69	273	
	5.7	1072	4.11	245	
	2.8	2176	1.22	497	**XE.74-(80M4B)**
	3.1	1992	1.33	455	
	3.3	1852	1.43	423	
	3.4	1808	1.46	413	
	4.1	1510	1.75	345	
	4.7	1318	2.01	301	
	5.1	1195	2.22	273	
	5.7	1072	2.47	245	
	7.2	854	3.10	195	
	8.0	766	3.46	175	
	9.8	626	3.45	143	



P_{Motor} [kW]	n_2(50Hz) [1/min]	T_2 [Nm]	f_B [-]	i_{ges} [-]	Model / Frame Size
0.75 kW (50Hz)	**4.1**	1510	1.30	345	**XE.63-(80M4B)**
0.90 kW (60Hz)	**4.7**	1318	1.49	301	
	5.1	1195	1.64	273	
	5.7	1072	1.83	245	
	7.2	854	2.30	195	
	8.0	766	2.56	175	
	9.2	670	2.93	153	
	9.8	626	2.51	143	
	11.6	530	2.96	121	
	11.8	563	1.74	119	**X.5-(80M4B)**
	16.1	412	2.38	87	
	19.7	336	2.92	71	
	24	279	3.51	59	
	19.7	336	1.46	71	**X.4-(80M4B)**
	24	279	1.75	59	
	30	222	2.20	47	
	33	203	2.41	43	
	40	166	2.96	35	
	48	137	3.57	29	
	16.1	412	1.17	87	**X.3C-(80M4B)**
	24	279	1.75	59	
	30	222	2.12	47	
	33	203	2.44	43	
	40	166	3.08	35	
	48	137	3.61	29	
	33	203	1.20	43	**X.3-(80M4B)**
	40	166	1.48	35	
	48	137	1.79	29	
	56	118	2.07	25	
	61	109	2.25	23	
	67	99	2.47	21	
	74	90	2.72	19	
	82	80	3.05	17	
	93	71	3.45	15	
	108	62	3.19	13	
	127	52	3.77	11	
	156	43	3.76	9	
	33	203	1.17	43	**X.2C-(80M4B)**
	40	166	1.29	35	
	48	137	1.71	29	
	56	118	1.81	25	
	61	109	1.81	23	
	67	99	2.53	21	
	82	80	2.66	17	
	93	71	3.42	15	
	108	62	3.35	13	
	127	52	3.44	11	
	156	43	3.43	9	
	56	118	1.24	25	**X.2-(80M4B)**
	61	109	1.35	23	
	67	99	1.48	21	
	74	90	1.63	19	



P_{Motor} [kW]	n_2(50Hz) [1/min]	T_2 [Nm]	f_B [-]	i_{ges} [-]	Model / Frame Size
0.75 kW (50Hz)	**82**	80	1.83	17	**X.2-(80M4B)**
0.90 kW (60Hz)	**93**	71	2.07	15	
	108	62	1.92	13	
	127	52	2.27	11	
	156	43	2.25	9	
	200	33	2.90	7	
	67	99	1.23	21	**X.1C-(80M4B)**
	82	80	1.37	17	
	93	71	1.45	15	
	108	62	1.52	13	
	127	52	1.54	11	
	127	52	1.33	11	**X.1-(80M4B)**
	156	43	1.31	9	
1.1 kW (50Hz)	**0.55**	16198	1.21	2523	**XE.117-(90S4A)**
1.3 kW (60Hz)	**0.56**	15954	1.23	2485	
	0.70	12847	1.53	2001	
	0.82	10985	1.79	1711	
	0.95	9470	2.07	1475	
	1.1	7865	2.49	1225	
	1.2	7749	2.53	1207	
	1.3	6838	2.87	1065	
	1.4	6517	3.01	1015	
	1.6	5797	3.38	903	
	1.8	4924	3.98	767	
	0.95	9470	1.24	1475	**XE.106-(90S4A)**
	1.1	7865	1.50	1225	
	1.2	7749	1.52	1207	
	1.3	6838	1.72	1065	
	1.4	6517	1.81	1015	
	1.6	5797	2.03	903	
	1.8	4924	2.39	767	
	2.2	4167	2.82	649	
	2.4	3820	3.08	595	
	2.5	3589	3.28	559	
	1.2	7197	1.23	1121	**XE.95-(90S4A)**
	1.4	6517	1.35	1015	
	1.6	5797	1.52	903	
	1.8	4924	1.79	767	
	2.2	4167	2.12	649	
	2.4	3820	2.31	595	
	2.5	3589	2.46	559	
	3.0	3037	2.91	473	
	3.4	2652	3.33	413	
	4.1	2215	3.54	345	
	4.4	2022	3.88	315	
	4.9	1830	3.80	285	
	2.5	3589	1.23	559	**XE.84-(90S4A)**
	3.0	3037	1.45	473	
	3.4	2652	1.66	413	
	4.1	2215	1.99	345	
	4.3	2112	2.09	329	
	4.9	1830	2.30	285	



P_{Motor} [kW]	n_2(50Hz) [1/min]	T_2 [Nm]	f_B [-]	i_{ges} [-]	Model / Frame Size
1.1 kW (50Hz)	**5.1**	1766	2.50	275	**XE.84-(90S4A)**
1.3 kW (60Hz)	**5.4**	1676	2.63	261	
	5.7	1573	2.81	245	
	6.3	1419	2.97	221	
	6.8	1329	3.32	207	
	7.2	1252	3.37	195	
	8.0	1124	3.93	175	
	8.7	1034	4.27	161	
	4.3	2112	1.25	329	**XE.74-(90S4A)**
	5.1	1766	1.50	275	
	5.4	1676	1.58	261	
	5.7	1573	1.68	245	
	6.3	1419	1.87	221	
	6.8	1329	1.99	207	
	7.2	1252	2.12	195	
	8.0	1124	2.36	175	
	8.7	1034	2.56	161	
	9.5	944	2.81	147	
	10.4	867	3.06	135	
	11.6	777	2.78	121	
	5.7	1573	1.25	245	**XE.63-(90S4A)**
	6.3	1419	1.38	221	
	6.8	1329	1.48	207	
	7.2	1252	1.57	195	
	8.0	1124	1.75	175	
	8.7	1034	1.90	161	
	9.5	944	2.08	147	
	10.4	867	2.26	135	
	11.6	777	2.02	121	
	16.1	604	3.25	87	**X.6-(90S4A)**
	19.7	493	3.98	71	
	16.1	604	2.86	87	**X.5C-(90S4A)**
	19.7	493	3.52	71	
	16.1	604	1.62	87	**X.5-(90S4A)**
	19.7	493	1.99	71	
	24	410	2.40	59	
	30	326	3.01	47	
	33	298	3.29	43	
	40	243	4.04	35	
	16.1	604	1.68	87	**X.4C-(90S4A)**
	19.7	493	1.81	71	
	24	410	2.45	59	
	30	326	2.53	47	
	33	298	2.96	43	
	40	243	3.89	35	
	24	410	1.20	59	**X.4-(90S4A)**
	30	326	1.50	47	
	33	298	1.64	43	
	40	243	2.02	35	
	48	201	2.43	29	
	56	174	2.82	25	
	61	160	3.07	23	



P_{Motor} [kW]	n_2(50Hz) [1/min]	T_2 [Nm]	f_B [-]	i_{ges} [-]	Model / Frame Size
1.1 kW (50Hz)	**67**	146	3.36	21	**X.4-(90S4A)**
1.3 kW (60Hz)	**74**	132	3.72	19	
	82	118	4.15	17	
	24	410	1.19	59	**X.3C-(90S4A)**
	30	326	1.44	47	
	33	298	1.67	43	
	40	243	2.10	35	
	48	201	2.46	29	
	56	174	2.77	25	
	61	160	2.77	23	
	67	146	3.50	21	
	48	201	1.22	29	**X.3-(90S4A)**
	56	174	1.41	25	
	61	160	1.53	23	
	67	146	1.68	21	
	74	132	1.86	19	
	82	118	2.08	17	
	93	104	2.35	15	
	108	90	2.17	13	
	127	76	2.57	11	
	156	62	2.56	9	
	200	49	3.29	7	
	48	201	1.17	29	**X.2C-(90S4A)**
	56	174	1.23	25	
	61	160	1.23	23	
	67	146	1.72	21	
	82	118	1.81	17	
	93	104	2.33	15	
	108	90	2.28	13	
	127	76	2.34	11	
	156	62	2.34	9	
	82	118	1.25	17	**X.2-(90S4A)**
	93	104	1.41	15	
	108	90	1.31	13	
	127	76	1.55	11	
	156	62	1.54	9	
	200	49	1.98	7	
1.5 kW (50Hz)	**0.79**	15540	1.26	1775	**XE.117-(90L4A)**
1.8 kW (60Hz)	**0.82**	14980	1.31	1711	
	0.95	12948	1.51	1479	
	1.1	10847	1.81	1239	
	1.3	9411	2.08	1075	
	1.6	7906	2.48	903	
	1.7	7048	2.78	805	
	1.8	6715	2.92	767	
	2.2	5647	3.47	645	
	2.4	5209	3.76	595	
	**1.3**	9411	1.25	1075	**XE.106-(90L4A)**
	1.6	7906	1.49	903	
	1.7	7048	1.67	805	
	1.8	6715	1.75	767	
	2.2	5647	2.08	645	

P_{Motor} [kW]	n_2(50Hz) [1/min]	T_2 [Nm]	f_B [-]	i_{ges} [-]	Model / Frame Size
1.5 kW (50Hz)	**2.4**	5209	2.26	595	**XE.106-(90L4A)**
1.8 kW (60Hz)	**3.0**	4141	2.84	473	
	3.4	3616	3.25	413	
	3.6	3423	3.01	391	
	3.7	3301	3.12	377	
	4.1	3020	3.41	345	
	4.3	2828	3.26	323	
	4.8	2530	3.64	289	
	1.7	7048	1.25	805	**XE.95-(90L4A)**
	1.8	6715	1.31	767	
	2.2	5647	1.56	645	
	2.4	5209	1.69	595	
	3.0	4141	2.13	473	
	3.4	3616	2.44	413	
	3.6	3423	2.29	391	
	3.7	3301	2.38	377	
	4.1	3020	2.60	345	
	4.3	2828	2.46	323	
	4.8	2530	2.75	289	
	4.9	2495	2.79	285	
	5.1	2390	3.28	273	
	3.4	3616	1.22	413	**XE.84-(90L4A)**
	3.6	3423	1.29	391	
	3.7	3301	1.34	377	
	4.1	3020	1.46	345	
	4.3	2828	1.49	323	
	4.8	2530	1.67	289	
	4.9	2495	1.69	285	
	5.1	2390	1.85	273	
	5.7	2145	2.06	245	
	6.1	2022	2.18	231	
	6.3	1935	2.18	221	
	6.8	1812	2.44	207	
	7.2	1707	2.47	195	
	7.5	1637	2.58	187	
	8.0	1532	2.88	175	
	8.5	1445	2.92	165	
	8.7	1410	3.13	161	
	9.2	1339	3.15	153	
	9.8	1252	2.82	143	
	10.4	1182	3.57	135	
	11.6	1059	3.33	121	
	5.7	2145	1.23	245	**XE.74-(90L4A)**
	6.1	2022	1.31	231	
	6.3	1935	1.37	221	
	6.8	1812	1.46	207	
	7.2	1707	1.55	195	
	7.5	1637	1.62	187	
	8.0	1532	1.73	175	
	8.5	1445	1.83	165	
	8.7	1410	1.88	161	
	9.2	1339	1.98	153	



P_{Motor} [kW]	n_2(50Hz) [1/min]	T_2 [Nm]	f_B [-]	i_{ges} [-]	Model / Frame Size
1.5 kW (50Hz)	**9.8**	1252	1.72	143	**XE.74-(90L4A)**
1.8 kW (60Hz)	**10.4**	1182	2.24	135	
	11.6	1059	2.04	121	
	16.1	823	3.22	87	**X.7-(90L4A)**
	7.5	1637	1.20	187	**XE.63-(90L4A)**
	8.0	1532	1.28	175	
	8.5	1445	1.36	165	
	8.7	1410	1.39	161	
	9.2	1339	1.46	153	
	9.8	1252	1.25	143	
	10.4	1182	1.66	135	
	11.6	1059	1.48	121	
	16.1	823	2.38	87	**X.6-(90L4A)**
	19.7	672	2.92	71	
	24	558	3.51	59	
	30	445	4.41	47	
	16.1	823	2.10	87	**X.5C-(90L4A)**
	19.7	672	2.58	71	
	24	558	3.05	59	
	30	445	3.88	47	
	19.7	672	1.46	71	**X.5-(90L4A)**
	24	558	1.76	59	
	30	445	2.21	47	
	33	407	2.41	43	
	40	331	2.96	35	
	48	274	3.57	29	
	56	237	4.15	25	
	61	218	4.51	23	
	16.1	823	1.23	87	**X.4C-(90L4A)**
	19.7	672	1.33	71	
	24	558	1.79	59	
	30	445	1.85	47	
	33	407	2.17	43	
	40	331	2.85	35	
	48	274	3.32	29	
	56	237	3.72	25	
	61	218	3.72	23	
	33	407	1.20	43	**X.4-(90L4A)**
	40	331	1.48	35	
	48	274	1.79	29	
	56	237	2.07	25	
	61	218	2.25	23	
	67	199	2.47	21	
	74	180	2.72	19	
	82	161	3.05	17	
	93	142	3.45	15	
	108	123	3.98	13	
	30	445	1.06	47	**X.3C-(90L4A)**
	33	407	1.22	43	
	40	331	1.54	35	
	48	274	1.80	29	
	56	237	2.03	25	



P_{Motor} [kW]	n_2(50Hz) [1/min]	T_2 [Nm]	f_B [-]	i_{ges} [-]	Model / Frame Size
1.5 kW (50Hz)	**61**	218	2.03	23	**X.3C-(90L4A)**
1.8 kW (60Hz)	**67**	199	2.57	21	
	82	161	2.97	17	
	93	142	3.09	15	
	108	123	3.07	13	
	127	104	3.16	11	
	156	85	3.13	9	
	67	199	1.23	21	**X.3-(90L4A)**
	74	180	1.36	19	
	82	161	1.52	17	
	93	142	1.73	15	
	108	123	1.59	13	
	127	104	1.88	11	
	156	85	1.88	9	
	200	66	2.41	7	
	67	199	1.26	21	**X.2C-(90L4A)**
	82	161	1.33	17	
	93	142	1.71	15	
	108	123	1.67	13	
	127	104	1.72	11	
	156	85	1.71	9	
	200	66	1.45	7	**X.2-(90L4A)**
2.2 kW (50Hz)	**1.1**	16179	1.21	1305	**XE.117-(100L4A)**
2.6 kW (60Hz)	**1.2**	15361	1.28	1239	
	1.3	13898	1.41	1121	
	1.4	13204	1.49	1065	
	1.5	11865	1.65	957	
	1.6	10972	1.79	885	
	1.8	9980	1.97	805	
	2.0	9063	2.16	731	
	2.2	8046	2.44	649	
	2.6	6831	2.44	551	
	3.1	5864	3.34	473	
	3.7	4848	3.44	391	
	3.8	4773	4.11	385	
	4.1	4426	3.77	357	
	4.2	4277	3.90	345	
	4.5	3955	4.22	319	
	2.0	9063	1.30	731	**XE.106-(100L4A)**
	2.2	8046	1.46	649	
	2.6	6831	1.51	551	
	3.7	4848	2.12	391	
	3.8	4773	2.47	385	
	4.1	4426	2.33	357	
	4.2	4277	2.41	345	
	4.5	3955	2.60	319	
	4.6	3905	2.64	315	
	5.1	3533	2.61	285	
	5.3	3385	3.04	273	
	5.6	3236	3.18	261	
	5.7	3161	2.92	255	
	6.3	2864	3.60	231	



P_{Motor} [kW]	n_2(50Hz) [1/min]	T_2 [Nm]	f_B [-]	i_{ges} [-]	Model / Frame Size
2.2 kW (50Hz)	**6.6**	2740	3.36	221	**XE.106-(100L4A)**
2.6 kW (60Hz)	**7.0**	2566	4.01	207	
	7.4	2418	3.81	195	
	7.7	2343	4.39	189	
	7.8	2318	3.98	187	
	8.5	2120	4.35	171	
	8.8	2046	4.51	165	
	9.5	1897	4.86	153	
	10.1	1773	4.31	143	
	3.1	5864	1.50	473	**XE.95-(100L4A)**
	3.3	5393	1.45	435	
	3.7	4848	1.62	391	
	3.8	4773	1.85	385	
	4.1	4426	1.77	357	
	4.2	4277	1.83	345	
	4.5	3955	1.98	319	
	4.6	3905	2.01	315	
	4.8	3732	2.36	301	
	5.1	3533	1.97	285	
	5.3	3385	2.32	273	
	5.6	3236	2.42	261	
	5.7	3161	2.20	255	
	5.9	3037	2.91	245	
	6.3	2864	2.74	231	
	6.6	2740	2.54	221	
	7.0	2566	3.06	207	
	7.1	2517	3.12	203	
	7.4	2418	2.88	195	
	7.7	2343	3.35	189	
	7.8	2318	3.00	187	
	8.5	2120	3.28	171	
	8.8	2046	3.40	165	
	9.0	1996	3.93	161	
	9.5	1897	3.67	153	
	9.9	1822	4.30	147	
	10.1	1773	3.26	143	
	10.7	1674	4.16	135	
	12.0	1500	3.86	121	
	5.3	3409	1.29	275	**XE.84-(100L4A)**
	5.6	3236	1.36	261	
	5.7	3161	1.33	255	
	5.9	3037	1.45	245	
	6.3	2864	1.54	231	
	6.4	2789	1.58	225	
	6.6	2740	1.54	221	
	7.0	2566	1.72	207	
	7.1	2517	1.75	203	
	7.4	2418	1.74	195	
	7.7	2343	1.88	189	
	7.8	2318	1.82	187	
	8.3	2170	2.03	175	
	8.5	2120	1.99	171	



P_{Motor} [kW]	n_2(50Hz) [1/min]	T_2 [Nm]	f_B [-]	i_{ges} [-]	Model / Frame Size
2.2 kW (50Hz)	**8.8**	2046	2.06	165	**XE.84-(100L4A)**
2.6 kW (60Hz)	**9.0**	1996	2.21	161	
	9.5	1897	2.22	153	
	9.9	1822	2.42	147	
	10.1	1773	1.99	143	
	10.7	1674	2.52	135	
	12.0	1500	2.35	121	
	8.3	2170	1.22	175	**XE.74-(100L4A)**
	8.5	2120	1.25	171	
	8.8	2046	1.29	165	
	9.0	1996	1.33	161	
	9.5	1897	1.40	153	
	9.9	1822	1.45	147	
	10.1	1773	1.22	143	
	10.7	1674	1.58	135	
	12.0	1500	1.44	121	
	16.7	1166	2.27	87	**X.7-(100L4A)**
	20	952	2.78	71	
	25	791	3.35	59	
	16.7	1166	1.68	87	**X.6-(100L4A)**
	20	952	2.06	71	
	25	791	2.48	59	
	31	630	3.11	47	
	34	576	3.40	43	
	41	469	4.18	35	
	16.7	1166	1.48	87	**X.5C-(100L4A)**
	20	952	1.82	71	
	25	791	2.15	59	
	31	630	2.74	47	
	34	576	2.99	43	
	41	469	3.89	35	
	25	791	1.24	59	**X.5-(100L4A)**
	31	630	1.56	47	
	34	576	1.70	43	
	41	469	2.09	35	
	50	389	2.52	29	
	58	335	2.93	25	
	63	308	3.18	23	
	69	281	3.49	21	
	76	255	3.85	19	
	85	228	4.31	17	
	25	791	1.27	59	**X.4C-(100L4A)**
	31	630	1.31	47	
	34	576	1.53	43	
	41	469	2.01	35	
	50	389	2.35	29	
	58	335	2.63	25	
	63	308	2.63	23	
	69	281	3.02	21	
	76	255	3.50	19	
	50	389	1.26	29	**X.4-(100L4A)**
	58	335	1.46	25	



P_{Motor} [kW]	n_2(50Hz) [1/min]	T_2 [Nm]	f_B [-]	i_{ges} [-]	Model / Frame Size
2.2 kW (50Hz)	**63**	308	1.59	23	**X.4-(100L4A)**
2.6 kW (60Hz)	**69**	281	1.74	21	
	76	255	1.92	19	
	85	228	2.15	17	
	97	201	2.44	15	
	112	174	2.81	13	
	132	147	3.32	11	
	161	121	3.25	9	
	207	94	4.18	7	
	50	389	1.27	29	**X.3C-(100L4A)**
	58	335	1.44	25	
	63	308	1.43	23	
	69	281	1.81	21	
	85	228	2.10	17	
	97	201	2.18	15	
	112	174	2.17	13	
	132	147	2.23	11	
	161	121	2.21	9	
	97	201	1.22	15	**X.3-(100L4A)**
	112	174	1.12	13	
	132	147	1.33	11	
	161	121	1.33	9	
	207	94	1.71	7	
	97	201	1.21	15	**X.2C-(100L4A)**
	112	174	1.18	13	
	132	147	1.21	11	
	161	121	1.21	9	
3 kW (50Hz)	**1.5**	16179	1.21	957	**XE.117-(100L4B)**
3.6 kW (60Hz)	**1.6**	14962	1.31	885	
	1.8	13609	1.44	805	
	2.0	12358	1.59	731	
	2.2	10972	1.79	649	
	2.6	9315	1.79	551	
	3.1	7997	2.45	473	
	3.7	6610	2.52	391	
	3.8	6509	3.01	385	
	3.8	6374	2.62	377	
	4.1	6035	2.76	357	
	4.2	5833	2.86	345	
	4.5	5393	3.09	319	
	4.8	5055	3.30	299	
	5.3	4615	3.61	273	
	5.7	4311	3.18	255	
	6.3	3905	4.27	231	
	6.6	3736	3.67	221	
	7.0	3500	4.76	207	
	7.8	3161	4.34	187	
	3.1	7997	1.47	473	**XE.106-(100L4B)**
	3.7	6610	1.56	391	
	3.8	6509	1.81	385	
	4.0	6103	1.51	361	
	4.1	6035	1.71	357	



P_{Motor} [kW]	n_2(50Hz) [1/min]	T_2 [Nm]	f_B [-]	i_{ges} [-]	Model / Frame Size
3 kW (50Hz)	**4.2**	5833	1.77	345	**XE.106-(100L4B)**
3.6 kW (60Hz)	**4.5**	5461	1.69	323	
	4.6	5325	1.93	315	
	4.8	5055	2.04	299	
	5.3	4615	2.23	273	
	5.6	4412	2.33	261	
	5.7	4311	2.14	255	
	6.3	3905	2.64	231	
	6.6	3736	2.47	221	
	7.0	3500	2.94	207	
	7.4	3297	2.80	195	
	7.7	3195	3.22	189	
	7.8	3161	2.92	187	
	8.5	2891	3.19	171	
	8.8	2789	3.30	165	
	9.5	2587	3.56	153	
	10.1	2418	3.16	143	
	10.7	2282	4.04	135	
	12.0	2046	3.74	121	
	3.8	6374	1.23	377	**XE.95-(100L4B)**
	4.1	6035	1.30	357	
	4.2	5833	1.35	345	
	4.5	5461	1.27	323	
	4.6	5325	1.47	315	
	4.8	5089	1.73	301	
	5.3	4615	1.70	273	
	5.6	4412	1.78	261	
	5.7	4311	1.61	255	
	5.9	4142	2.13	245	
	6.3	3905	2.01	231	
	6.6	3736	1.86	221	
	7.0	3500	2.24	207	
	7.1	3432	2.29	203	
	7.4	3297	2.11	195	
	7.7	3195	2.46	189	
	7.8	3161	2.20	187	
	8.5	2891	2.41	171	
	8.8	2789	2.50	165	
	9.0	2722	2.88	161	
	9.5	2587	2.69	153	
	9.9	2485	3.16	147	
	10.1	2418	2.39	143	
	10.7	2282	3.05	135	
	12.0	2046	2.83	121	
	7.0	3500	1.26	207	**XE.84-(100L4B)**
	7.1	3432	1.29	203	
	7.4	3297	1.28	195	
	7.7	3195	1.38	189	
	7.8	3161	1.33	187	
	8.3	2959	1.49	175	
	8.5	2891	1.46	171	
	8.8	2789	1.51	165	



P_{Motor} [kW]	n_2(50Hz) [1/min]	T_2 [Nm]	f_B [-]	i_{ges} [-]	Model / Frame Size
3 kW (50Hz)	**9.0**	2722	1.62	161	**XE.84-(100L4B)**
3.6 kW (60Hz)	**9.5**	2587	1.63	153	
	9.9	2485	1.78	147	
	10.1	2418	1.46	143	
	10.7	2282	1.85	135	
	12.0	2046	1.73	121	
	16.7	1590	1.67	87	**X.7-(100L4B)**
	20	1298	2.04	71	
	25	1078	2.46	59	
	31	859	3.08	47	
	34	786	3.37	43	
	41	640	4.14	35	
	16.7	1590	1.23	87	**X.6-(100L4B)**
	20	1298	1.51	71	
	25	1078	1.82	59	
	31	859	2.28	47	
	34	786	2.50	43	
	41	640	3.07	35	
	50	530	3.70	29	
	20	1298	1.34	71	**X.5C-(100L4B)**
	25	1078	1.58	59	
	31	859	2.01	47	
	34	786	2.19	43	
	41	640	2.85	35	
	50	530	3.20	29	
	58	457	3.81	25	
	63	420	3.80	23	
	34	786	1.25	43	**X.5-(100L4B)**
	41	640	1.53	35	
	50	530	1.85	29	
	58	457	2.15	25	
	63	420	2.33	23	
	69	384	2.56	21	
	76	347	2.82	19	
	85	311	3.16	17	
	97	274	3.58	15	
	112	238	3.30	13	
	132	201	3.90	11	
	161	164	3.82	9	
	41	640	1.48	35	**X.4C-(100L4B)**
	50	530	1.72	29	
	58	457	1.93	25	
	63	420	1.93	23	
	69	384	2.22	21	
	76	347	2.57	19	
	85	311	3.00	17	
	97	274	3.07	15	
	112	238	3.16	13	
	132	201	3.26	11	
	161	164	3.26	9	
	69	384	1.28	21	**X.4-(100L4B)**
	76	347	1.41	19	



P_{Motor} [kW]	n_2(50Hz) [1/min]	T_2 [Nm]	f_B [-]	i_{ges} [-]	Model / Frame Size
3 kW (50Hz)	**85**	311	1.58	17	**X.4-(100L4B)**
3.6 kW (60Hz)	**97**	274	1.79	15	
	112	238	2.06	13	
	132	201	2.44	11	
	161	164	2.38	9	
	207	128	3.06	7	
	58	457	1.05	25	**X.3C-(100L4B)**
	63	420	1.05	23	
	69	384	1.33	21	
	85	311	1.54	17	
	97	274	1.60	15	
	112	238	1.59	13	
	132	201	1.64	11	
	161	164	1.62	9	
4 kW (50Hz)	**2.2**	14629	1.34	649	**XE.117-(112M4A)**
4.8 kW (60Hz)	**2.6**	12420	1.34	551	
	3.1	10662	1.84	473	
	3.7	8814	1.89	391	
	3.8	8678	2.26	385	
	4.1	8047	2.07	357	
	4.2	7777	2.14	345	
	4.5	7191	2.32	319	
	5.0	6514	2.11	289	
	5.7	5748	2.39	255	
	6.3	5207	3.20	231	
	6.6	4982	2.76	221	
	7.0	4666	3.57	207	
	7.7	4260	3.91	189	
	7.8	4215	3.26	187	
	9.5	3449	3.98	153	
	3.7	8723	1.35	387	**XE.106-(112M4A)**
	3.8	8678	1.36	385	
	4.1	8047	1.28	357	
	4.2	7777	1.32	345	
	4.5	7191	1.43	319	
	4.6	7101	1.45	315	
	5.0	6514	1.42	289	
	5.3	6154	1.67	273	
	5.6	5883	1.75	261	
	5.7	5748	1.60	255	
	6.3	5207	1.98	231	
	6.6	4982	1.85	221	
	7.0	4666	2.21	207	
	7.4	4396	2.10	195	
	7.7	4260	2.42	189	
	7.8	4215	2.19	187	
	8.8	3719	2.48	165	
	9.5	3449	2.67	153	
	10.1	3223	2.37	143	
	10.7	3043	3.03	135	
	12.0	2727	2.80	121	
	5.3	6154	1.27	273	**XE.95-(112M4A)**



P_{Motor} [kW]	n_2(50Hz) [1/min]	T_2 [Nm]	f_B [-]	i_{ges} [-]	Model / Frame Size
4 kW (50Hz)	**5.6**	5883	1.33	261	**XE.95-(112M4A)**
4.8 kW (60Hz)	**5.7**	5748	1.21	255	
	5.7	5703	1.38	253	
	5.9	5523	1.60	245	
	6.3	5207	1.51	231	
	6.6	4982	1.40	221	
	7.0	4666	1.68	207	
	7.1	4576	1.71	203	
	7.4	4396	1.58	195	
	7.7	4260	1.84	189	
	7.8	4215	1.65	187	
	8.5	3855	1.81	171	
	8.8	3719	1.87	165	
	9.0	3629	2.16	161	
	9.5	3449	2.02	153	
	9.9	3314	2.37	147	
	10.1	3223	1.79	143	
	10.7	3043	2.29	135	
	12.0	2727	2.12	121	
	9.9	3314	1.33	147	**XE.84-(112M4A)**
	10.7	3043	1.39	135	
	12.0	2727	1.29	121	
	16.7	2120	1.25	87	**X.7-(112M4A)**
	20	1730	1.53	71	
	25	1438	1.84	59	
	31	1145	2.31	47	
	34	1048	2.53	43	
	41	853	3.10	35	
	25	1438	1.36	59	**X.6-(112M4A)**
	31	1145	1.71	47	
	34	1048	1.87	43	
	41	853	2.30	35	
	50	707	2.77	29	
	58	609	3.22	25	
	63	560	3.50	23	
	69	512	3.83	21	
	31	1145	1.51	47	**X.5C-(112M4A)**
	34	1048	1.65	43	
	41	853	2.14	35	
	50	707	2.40	29	
	58	609	2.86	25	
	63	560	2.85	23	
	69	512	3.25	21	
	76	463	3.45	19	
	85	414	3.70	17	
	97	366	3.63	15	
	50	707	1.39	29	**X.5-(112M4A)**
	58	609	1.61	25	
	63	560	1.75	23	
	69	512	1.92	21	
	76	463	2.12	19	
	85	414	2.37	17	



P_{Motor} [kW]	n_2(50Hz) [1/min]	T_2 [Nm]	f_B [-]	i_{ges} [-]	Model / Frame Size
4 kW (50Hz)	**97**	366	2.68	15	**X.5-(112M4A)**
4.8 kW (60Hz)	**112**	317	2.48	13	
	132	268	2.93	11	
	161	219	2.86	9	
	207	171	3.68	7	
	50	707	1.29	29	**X.4C-(112M4A)**
	58	609	1.44	25	
	63	560	1.45	23	
	69	512	1.66	21	
	76	463	1.92	19	
	85	414	2.25	17	
	97	366	2.31	15	
	112	317	2.37	13	
	132	268	2.45	11	
	161	219	2.45	9	
	207	171	3.15	7	
	97	366	1.34	15	**X.4-(112M4A)**
	112	317	1.55	13	
	132	268	1.83	11	
	161	219	1.79	9	
	207	171	2.30	7	
	69	512	1.00	21	**X.3C-(112M4A)**
	85	414	1.15	17	
	97	366	1.20	15	
	112	317	1.19	13	
	132	268	1.23	11	
	161	219	1.22	9	
5.5 kW (50Hz)	**3.1**	14660	1.34	473	**XE.117-(132S4A)**
6.6 kW (60Hz)	**3.7**	12119	1.38	391	
	3.8	11933	1.64	385	
	4.1	11065	1.51	357	
	4.2	10693	1.56	345	
	4.5	9887	1.69	319	
	5.0	8957	1.53	289	
	5.7	7904	1.74	255	
	6.3	7160	2.33	231	
	6.6	6850	2.00	221	
	7.0	6416	2.60	207	
	7.7	5858	2.85	189	
	7.8	5796	2.37	187	
	9.5	4742	2.89	153	
	5.7	7842	1.31	253	**XE.106-(132S4A)**
	6.3	7160	1.44	231	
	6.6	6850	1.35	221	
	7.0	6416	1.60	207	
	7.4	6044	1.53	195	
	7.7	5858	1.76	189	
	7.8	5796	1.59	187	
	8.5	5300	1.74	171	
	8.8	5114	1.80	165	
	9.5	4742	1.94	153	
	10.1	4432	1.73	143	



P_{Motor} [kW]	n_2(50Hz) [1/min]	T_2 [Nm]	f_B [-]	i_{ges} [-]	Model / Frame Size
5.5 kW (50Hz)	**10.7**	4184	2.20	135	**XE.106-(132S4A)**
6.6 kW (60Hz)	**12.0**	3750	2.04	121	
	7.0	6416	1.22	207	**XE.95-(132S4A)**
	7.1	6292	1.25	203	
	7.7	5858	1.34	189	
	7.8	5796	1.20	187	
	8.5	5300	1.31	171	
	8.8	5114	1.36	165	
	9.0	4990	1.57	161	
	9.5	4742	1.47	153	
	9.9	4556	1.72	147	
	10.1	4432	1.31	143	
	10.7	4184	1.66	135	
	12.0	3750	1.54	121	
	16.7	2915	2.69	87	**X.9-(132S4A)**
	20	2379	3.30	71	
	16.7	2915	1.51	87	**X.8-(132S4A)**
	20	2379	1.85	71	
	25	1977	2.23	59	
	31	1575	2.80	47	
	34	1441	3.06	43	
	41	1173	3.76	35	
	25	1977	1.34	59	**X.7-(132S4A)**
	31	1575	1.68	47	
	34	1441	1.84	43	
	41	1173	2.26	35	
	50	972	2.73	29	
	58	838	3.16	25	
	63	771	3.44	23	
	31	1575	1.25	47	**X.6-(132S4A)**
	34	1441	1.36	43	
	41	1173	1.67	35	
	50	972	2.02	29	
	58	838	2.34	25	
	63	771	2.54	23	
	69	704	2.79	21	
	76	637	3.08	19	
	85	570	3.44	17	
	97	503	3.90	15	
	34	1441	1.20	43	**X.5C-(132S4A)**
	41	1173	1.56	35	
	50	972	1.75	29	
	58	838	2.08	25	
	63	771	2.07	23	
	69	704	2.36	21	
	76	637	2.51	19	
	85	570	2.69	17	
	97	503	2.64	15	
	112	436	3.06	13	
	132	369	3.18	11	
	161	302	3.18	9	
	63	771	1.27	23	**X.5-(132S4A)**



P_{Motor} [kW]	n_2(50Hz) [1/min]	T_2 [Nm]	f_B [-]	i_{ges} [-]	Model / Frame Size
5.5 kW (50Hz)	**69**	704	1.39	21	**X.5-(132S4A)**
6.6 kW (60Hz)	**76**	637	1.54	19	
	85	570	1.72	17	
	97	503	1.95	15	
	112	436	1.80	13	
	132	369	2.13	11	
	161	302	2.08	9	
	207	235	2.68	7	
	132	369	1.33	11	**X.4-(132S4A)**
	161	302	1.30	9	
	207	235	1.67	7	
7.5 kW (50Hz)	**4.5**	13483	1.24	319	**XE.117-(132M4A)**
9 kW (60Hz)	**5.3**	11538	1.44	273	
	5.7	10778	1.27	255	
	6.3	9763	1.71	231	
	7.0	8749	1.91	207	
	7.7	7988	1.29	189	**XE.106-(132M4A)**
	8.5	7227	1.28	171	
	8.8	6974	1.32	165	
	9.0	6805	1.51	161	
	9.5	6467	1.43	153	
	9.9	6213	1.66	147	
	10.7	5706	1.62	135	
	12.0	5114	1.50	121	
	9.9	6213	1.26	147	**XE.95-(132M4A)**
	10.7	5706	1.22	135	
	16.7	3975	1.97	87	**X.9-(132M4A)**
	20	3244	2.42	71	
	25	2696	3.27	59	
	20	3244	1.36	71	**X.8-(132M4A)**
	25	2696	1.64	59	
	31	2148	2.05	47	
	34	1965	2.25	43	
	41	1599	2.76	35	
	50	1325	3.33	29	
	58	1142	3.86	25	
	31	2148	1.23	47	**X.7-(132M4A)**
	34	1965	1.35	43	
	41	1599	1.66	35	
	50	1325	2.00	29	
	58	1142	2.32	25	
	63	1051	2.52	23	
	69	960	2.76	21	
	76	868	3.05	19	
	85	777	3.41	17	
	97	685	3.86	15	
	112	594	3.63	13	
	41	1599	1.23	35	**X.6-(132M4A)**
	50	1325	1.48	29	
	58	1142	1.72	25	
	63	1051	1.87	23	
	69	960	2.04	21	



P_{Motor} [kW]	n_2(50Hz) [1/min]	T_2 [Nm]	f_B [-]	i_{ges} [-]	Model / Frame Size
7.5 kW (50Hz)	**76**	868	2.26	19	**X.6-(132M4A)**
9 kW (60Hz)	**85**	777	2.52	17	
	97	685	2.86	15	
	112	594	2.64	13	
	132	503	3.12	11	
	161	411	3.05	9	
	50	1325	1.28	29	**X.5C-(132M4A)**
	58	1142	1.52	25	
	63	1051	1.52	23	
	69	960	1.73	21	
	76	868	1.84	19	
	85	777	1.97	17	
	97	685	1.93	15	
	112	594	2.24	13	
	132	503	2.33	11	
	161	411	2.33	9	
	207	320	3.00	7	
	85	777	1.26	17	**X.5-(132M4A)**
	97	685	1.43	15	
	112	594	1.32	13	
	132	503	1.56	11	
	161	411	1.53	9	
	207	320	1.96	7	
11 kW (50Hz)	**7.7**	11716	1.42	189	**XE.117-(160M4A)**
13.2 kW (60Hz)	**9.0**	9980	1.67	161	
	9.5	9484	1.45	153	
	16.7	5830	2.02	87	**X.10-(160M4A)**
	20	4758	2.47	71	
	25	3954	2.98	59	
	34	2882	4.08	43	
	16.7	5830	1.35	87	**X.9-(160M4A)**
	20	4758	1.65	71	
	25	3954	2.23	59	
	31	3150	2.80	47	
	34	2882	3.06	43	
	41	2346	3.76	35	
	31	3150	1.40	47	**X.8-(160M4A)**
	34	2882	1.53	43	
	41	2346	1.88	35	
	50	1943	2.27	29	
	58	1675	2.63	25	
	63	1541	2.86	23	
	69	1407	3.14	21	
	76	1273	3.31	19	
	85	1139	3.70	17	
	97	1005	4.20	15	
	50	1943	1.36	29	**X.7-(160M4A)**
	58	1675	1.58	25	
	63	1541	1.72	23	
	69	1407	1.88	21	
	76	1273	2.08	19	
	85	1139	2.32	17	



P_{Motor} [kW]	n_2(50Hz) [1/min]	T_2 [Nm]	f_B [-]	i_{ges} [-]	Model / Frame Size
11 kW (50Hz)	**97**	1005	2.63	15	**X.7-(160M4A)**
13.2 kW (60Hz)	**112**	871	2.48	13	
	132	737	2.93	11	
	161	603	2.86	9	
	63	1541	1.27	23	**X.6-(160M4A)**
	69	1407	1.39	21	
	76	1273	1.54	19	
	85	1139	1.72	17	
	97	1005	1.95	15	
	112	871	1.80	13	
	132	737	2.13	11	
	161	603	2.08	9	
15 kW (50Hz)	**7.0**	17498	0.67	207	**XE.117-(160L4A)**
18 kW (60Hz)	**7.7**	15976	0.73	189	
	9.5	12933	1.06	153	
	16.7	7950	2.47	87	**X.11-(160L4A)**
	20	6488	3.02	71	
	25	5392	3.64	59	
	16.7	7950	1.48	87	**X.10-(160L4A)**
	20	6488	1.81	71	
	25	5392	2.18	59	
	34	3929	2.99	43	
	41	3198	3.68	35	
	50	2650	3.89	29	
	20	6488	1.21	71	**X.9-(160L4A)**
	25	5392	1.64	59	
	34	3929	2.25	43	
	41	3198	2.76	35	
	50	2650	2.96	29	
	63	2102	3.73	23	
	41	3198	1.38	35	**X.8-(160L4A)**
	50	2650	1.67	29	
	58	2285	1.93	25	
	63	2102	2.10	23	
	69	1919	2.30	21	
	76	1736	2.43	19	
	85	1554	2.71	17	
	97	1371	3.08	15	
	112	1188	2.97	13	
	132	1005	3.51	11	
	161	822	3.43	9	
	63	2102	1.26	23	**X.7-(160L4A)**
	69	1919	1.38	21	
	76	1736	1.53	19	
	85	1554	1.70	17	
	97	1371	1.93	15	
	112	1188	1.82	13	
	132	1005	2.15	11	
	161	822	2.10	9	
	85	1554	1.26	17	**X.6-(160L4A)**
	97	1371	1.43	15	
	112	1188	1.32	13	



P_{Motor} [kW]	n_2(50Hz) [1/min]	T_2 [Nm]	f_B [-]	i_{ges} [-]	Model / Frame Size
15 kW (50Hz)	**132**	1005	1.56	11	**X.6-(160L4A)**
18 kW (60Hz)	**161**	822	1.53	9	
18.5 kW (50Hz)	**16.7**	9805	1.20	87	**X.10-(180M4A)**
22 kW (60Hz)	**20**	8002	1.47	71	
	25	6650	1.77	59	
	34	4846	2.43	43	
	41	3945	2.98	35	
	50	3268	3.15	29	
	63	2592	3.97	23	
	25	6650	1.33	59	**X.9-(180M4A)**
	34	4846	1.82	43	
	41	3945	2.24	35	
	50	3268	2.40	29	
	63	2592	3.03	23	
	69	2367	3.31	21	
	76	2141	3.25	19	
	85	1916	3.63	17	
	97	1691	4.12	15	
	50	3268	1.35	29	**X.8-(180M4A)**
	63	2592	1.70	23	
	69	2367	1.86	21	
	76	2141	1.97	19	
	85	1916	2.20	17	
	97	1691	2.49	15	
	112	1465	2.41	13	
	132	1240	2.85	11	
	161	1014	2.78	9	
22 kW (50Hz)	**20**	9516	1.24	71	**X.10-(180L4A)**
26 kW (60Hz)	**25**	7908	1.49	59	
	34	5763	2.04	43	
	41	4691	2.51	35	
	50	3887	2.65	29	
	63	3083	3.34	23	
	34	5763	1.53	43	**X.9-(180L4A)**
	41	4691	1.88	35	
	50	3887	2.02	29	
	63	3083	2.54	23	
	69	2815	2.79	21	
	76	2547	2.73	19	
	85	2278	3.06	17	
	97	2010	3.46	15	
	112	1742	3.32	13	
	132	1474	3.92	11	
	63	3083	1.43	23	**X.8-(180L4A)**
	69	2815	1.57	21	
	76	2547	1.66	19	
	85	2278	1.85	17	
	97	2010	2.10	15	
	112	1742	2.03	13	
	132	1474	2.39	11	
	161	1206	2.34	9	



P_{Motor} [kW]	n_2(50Hz) [1/min]	T_2 [Nm]	f_B [-]	i_{ges} [-]	Model / Frame Size
30 kW (50Hz)	**16.7**	15901	1.23	87	**X.11-(200L4A)**
36 kW (60Hz)	**20**	12976	1.51	71	
	25	10783	1.82	59	
	34	7859	2.50	43	
	41	6397	3.07	35	
	50	5300	3.15	29	
	63	4204	3.97	23	
	34	7859	1.50	43	**X.10-(200L4A)**
	41	6397	1.84	35	
	50	5300	1.94	29	
	63	4204	2.45	23	
	69	3838	2.68	21	
	76	3473	2.65	19	
	85	3107	2.97	17	
	97	2742	3.36	15	
	112	2376	3.22	13	
	132	2010	3.80	11	
	161	1645	3.72	9	
	41	6397	1.38	35	**X.9-(200L4A)**
	50	5300	1.48	29	
	63	4204	1.87	23	
	69	3838	2.04	21	
	76	3473	2.00	19	
	85	3107	2.24	17	
	97	2742	2.54	15	
	112	2376	2.44	13	
	132	2010	2.88	11	
	161	1645	2.81	9	
37 kW (50Hz)	**20**	16004	1.23	71	**X.11-(225S4A)**
44 kW (60Hz)	**25**	13299	1.47	59	
	41	7889	2.49	35	
	50	6537	2.55	29	
	63	5184	3.22	23	
	69	4734	3.52	21	
	85	3832	3.58	17	
	41	7889	1.49	35	**X.10-(225S4A)**
	50	6537	1.58	29	
	63	5184	1.99	23	
	69	4734	2.18	21	
	76	4283	2.15	19	
	85	3832	2.41	17	
	97	3381	2.73	15	
	112	2930	2.61	13	
	132	2480	3.08	11	
	161	2029	3.02	9	
	50	6537	1.20	29	**X.9-(225S4A)**
	63	5184	1.51	23	
	69	4734	1.66	21	
	76	4283	1.63	19	
	85	3832	1.82	17	
	97	3381	2.06	15	
	112	2930	1.97	13	
	132	2480	2.33	11	
	161	2029	2.28	9	



P_{Motor} [kW]	n_2(50Hz) [1/min]	T_2 [Nm]	f_B [-]	i_{ges} [-]	Model / Frame Size
45 kW (50Hz)	**25**	16175	1.21	59	**X.11-(225M4A)**
54 kW (60Hz)	**34**	11788	1.66	43	
	41	9595	2.04	35	
	50	7950	2.10	29	
	63	6305	2.64	23	
	69	5757	2.90	21	
	85	4661	2.95	17	
	41	9595	1.23	35	**X.10-(225M4A)**
	50	7950	1.30	29	
	63	6305	1.63	23	
	69	5757	1.79	21	
	76	5209	1.77	19	
	85	4661	1.98	17	
	97	4112	2.24	15	
	112	3564	2.15	13	
	132	3016	2.54	11	
	161	2467	2.48	9	
	63	6305	1.24	23	**X.9-(225M4A)**
	69	5757	1.36	21	
	76	5209	1.34	19	
	85	4661	1.49	17	
	97	4112	1.69	15	
	112	3564	1.62	13	
	132	3016	1.92	11	
	161	2467	1.88	9	
55 kW (50Hz)	**34**	14408	1.36	43	**X.11-(250M4A)**
66 kW (60Hz)	**41**	11728	1.67	35	
	50	9717	1.72	29	
	69	7037	2.37	21	
	85	5696	2.41	17	
	63	7707	1.34	23	**X.10-(250M4A)**
	69	7037	1.46	21	
	76	6366	1.45	19	
	85	5696	1.62	17	
	97	5026	1.83	15	
	112	4356	1.76	13	
	132	3686	2.08	11	
	161	3016	2.03	9	
75 kW (50Hz)	**41**	15992	1.23	35	**X.11-(280S4A)**
90 kW (60Hz)	**50**	13251	1.26	29	
	69	9595	1.74	21	
	85	7768	1.77	17	
	97	6854	1.34	15	**X.10-(280S4A)**
	112	5940	1.29	13	
	132	5026	1.52	11	
	161	4112	1.49	9	



P_{Motor} [kW]	n_2(50Hz) [1/min]	T_2 [Nm]	f_B [-]	i_{ges} [-]	Model / Frame Size
18.5 kW (50Hz)	**11.3**	14508	1.82	87	**X.13N-(200L6A)**
22 kW (60Hz)	**11.3**	14508	1.42	87	**X.12N-(200L6A)**
	16.6	9839	1.20	59	**X.10-(200L6A)**
	23	7171	1.64	43	
	28	5837	2.02	35	
	34	4836	2.13	29	
	43	3835	2.68	23	
	47	3502	2.94	21	
	52	3168	2.91	19	
	58	2835	3.25	17	
	23	7171	1.23	43	**X.9-(200L6A)**
	28	5837	1.51	35	
	34	4836	1.62	29	
	43	3835	2.05	23	
	47	3502	2.24	21	
	52	3168	2.20	19	
	58	2835	2.46	17	
	65	2501	2.78	15	
	75	2168	2.67	13	
	89	1834	3.15	11	
	109	1501	3.08	9	
	47	3502	1.26	21	**X.8-(200L6A)**
	52	3168	1.33	19	
	58	2835	1.49	17	
	65	2501	1.69	15	
	75	2168	1.63	13	
	89	1834	1.92	11	
	109	1501	1.88	9	
22 kW (50Hz)	**11.3**	17253	2.05	87	**X.14N-(200L6A)**
26 kW (60Hz)	**11.3**	17253	1.53	87	**X.13N-(200L6A)**
	11.3	17253	1.20	87	**X.12N-(200L6A)**
	16.6	11700	1.75	59	
	23	8527	1.38	43	**X.10-(200L6A)**
	28	6941	1.70	35	
	34	5751	1.79	29	
	43	4561	2.26	23	
	47	4164	2.47	21	
	52	3768	2.45	19	
	58	3371	2.73	17	
	65	2975	3.10	15	
	75	2578	2.97	13	
	89	2181	3.51	11	
	109	1785	3.43	9	
	28	6941	1.27	35	**X.9-(200L6A)**
	34	5751	1.36	29	
	43	4561	1.72	23	
	47	4164	1.88	21	
	52	3768	1.85	19	
	58	3371	2.07	17	
	65	2975	2.34	15	
	75	2578	2.24	13	
	89	2181	2.65	11	



P_{Motor} [kW]	n_2(50Hz) [1/min]	T_2 [Nm]	f_B [-]	i_{ges} [-]	Model / Frame Size
22 kW (50Hz)	**58**	3371	1.25	17	**X.8-(200L6A)**
26 kW (60Hz)	**65**	2975	1.42	15	
	75	2578	1.37	13	
	89	2181	1.62	11	
	109	1785	1.58	9	
30 kW (50Hz)	**11.3**	23527	1.50	87	**X.14N-(225M6A)**
36 kW (60Hz)	**11.3**	23527	1.12	87	**X.13N-(225M6A)**
	16.6	15955	1.84	59	
	16.6	15955	1.28	59	**X.12N-(225M6A)**
	23	11628	1.85	43	
	16.6	15955	1.23	59	**X.11-(225M6A)**
	23	11628	1.69	43	
	28	9465	2.07	35	
	34	7842	2.13	29	
	43	6220	2.68	23	
	58	4597	2.99	17	
	28	9465	1.24	35	**X.10-(225M6A)**
	34	7842	1.31	29	
	43	6220	1.66	23	
	47	5679	1.81	21	
	52	5138	1.79	19	
	58	4597	2.01	17	
	65	4056	2.27	15	
	75	3515	2.18	13	
	89	2975	2.57	11	
	109	2434	2.51	9	
	43	6220	1.26	23	**X.9-(225M6A)**
	47	5679	1.38	21	
	52	5138	1.36	19	
	58	4597	1.51	17	
	65	4056	1.72	15	
	75	3515	1.65	13	
	89	2975	1.95	11	
	109	2434	1.90	9	
37 kW (50Hz)	**11.3**	29016	1.22	87	**X.14N-(250M6A)**
44 kW (60Hz)	**16.6**	19678	2.01	59	
	16.6	19678	1.49	59	**X.13N-(250M6A)**
	23	14341	1.82	43	
	16.6	19678	1.04	59	**X.12N-(250M6A)**
	23	14341	1.50	43	
	34	9672	1.87	29	
	23	14341	1.37	43	**X.11-(250M6A)**
	28	11673	1.68	35	
	34	9672	1.72	29	
	43	7671	2.17	23	
	47	7004	2.38	21	
	58	5670	2.42	17	
	43	7671	1.34	23	**X.10-(250M6A)**
	47	7004	1.47	21	
	52	6337	1.45	19	
	58	5670	1.63	17	
	65	5003	1.84	15	



P_{Motor} [kW]	n_2(50Hz) [1/min]	T_2 [Nm]	f_B [-]	i_{ges} [-]	Model / Frame Size
37 kW (50Hz)	**75**	4336	1.76	13	**X.10-(250M6A)**
44 kW (60Hz)	**89**	3669	2.08	11	
	109	3002	2.04	9	
	58	5670	1.23	17	**X.9-(250M6A)**
	65	5003	1.39	15	
	75	4336	1.33	13	
	89	3669	1.58	11	
	109	3002	1.54	9	
45 kW (50Hz)	**11.3**	35290	1.00	87	**X.14N-(280S6A)**
54 kW (60Hz)	**16.6**	23932	1.65	59	
	23	17442	2.10	43	
	16.6	23932	1.23	59	**X.13N-(280S6A)**
	23	17442	1.50	43	
	34	11763	2.10	29	
	23	17442	1.24	43	**X.12N-(280S6A)**
	34	11763	1.53	29	
	28	14197	1.38	35	**X.11-(280S6A)**
	34	11763	1.42	29	
	43	9330	1.79	23	
	47	8518	1.96	21	
	58	6896	1.99	17	
	47	8518	1.21	21	**X.10-(280S6A)**
	52	7707	1.20	19	
	58	6896	1.34	17	
	65	6084	1.52	15	
	75	5273	1.45	13	
	89	4462	1.71	11	
	109	3651	1.68	9	
	89	4462	1.30	11	**X.9-(280S6A)**
	109	3651	1.27	9	
55 kW (50Hz)	**16.6**	29251	1.35	59	**X.14N-(280M6A)**
66 kW (60Hz)	**23**	21318	1.72	43	
	16.6	29251	1.00	59	**X.13N-(280M6A)**
	23	21318	1.23	43	
	34	14377	1.72	29	
	23	21318	1.01	43	**X.12N-(280M6A)**
	34	14377	1.26	29	
	47	10411	1.71	21	
	43	11403	1.46	23	**X.11-(280M6A)**
	47	10411	1.60	21	
	58	8428	1.63	17	
	65	7437	1.24	15	**X.10-(280M6A)**
	89	5453	1.40	11	
	109	4462	1.37	9	
75 kW (50Hz)	**16.6**	39887	0.99	59	**X.14N-(315S6A)**
90 kW (60Hz)	**23**	29070	1.26	43	
	34	19606	1.80	29	
	47	14197	1.88	21	
	34	19606	1.26	29	**X.13N-(315S6A)**
	47	14197	1.55	21	
	65	10141	1.87	15	
	89	7437	1.88	11	



P_{Motor} [kW]	n_2(50Hz) [1/min]	T_2 [Nm]	f_B [-]	i_{ges} [-]	Model / Frame Size
75 kW (50Hz)	**47**	14197	1.26	21	**X.12N-(315S6A)**
90 kW (60Hz)	**65**	10141	1.52	15	
	89	7437	1.55	11	
90 kW (50Hz)	**23**	34884	1.05	43	**X.14N-(315M6A)**
108 kW (60Hz)	**34**	23527	1.50	29	
	47	17037	1.57	21	
	65	12169	1.88	15	
	34	23527	1.05	29	**X.13N-(315M6A)**
	47	17037	1.29	21	
	65	12169	1.56	15	
	89	8924	1.57	11	
	47	17037	1.05	21	**X.12N-(315M6A)**
	65	12169	1.27	15	
	89	8924	1.30	11	
110 kW (50Hz)	**34**	28755	1.23	29	**X.14N-(315L6A)**
132 kW (60Hz)	**47**	20822	1.28	21	
	65	14873	1.54	15	
	89	10907	1.54	11	
	47	20822	1.06	21	**X.13N-(315L6A)**
	65	14873	1.28	15	
	89	10907	1.28	11	
	65	14873	1.04	15	**X.12N-(315L6A)**
	89	10907	1.06	11	



Mounting position

B3 - horizontal	**B6** - horizontal nearside	**B7** - horizontal standboard
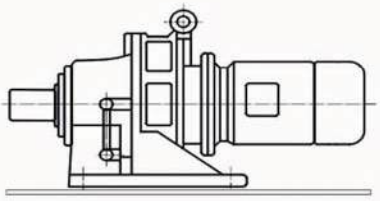	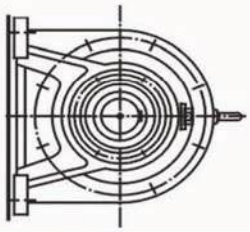	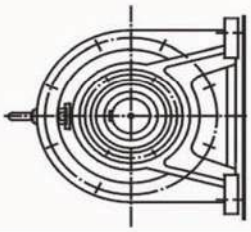
V6 - horizontal output shaft upward	**V5** - horizontal output shaft downward	**B8** - horizontal face upward
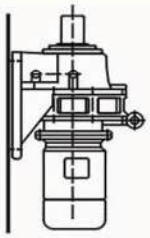	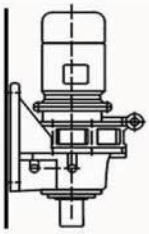	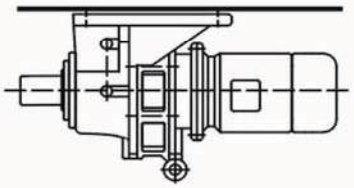
V1 - vertical	**B5** - vertical level	**V3** - vertical headstand
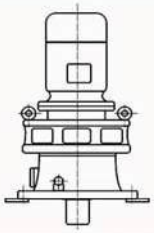	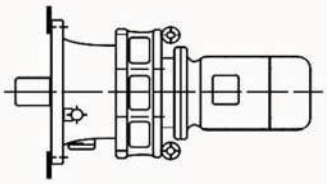	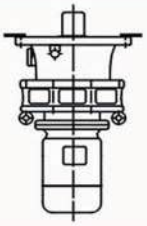

1. Single-Stage Foot Mounted Dimensions

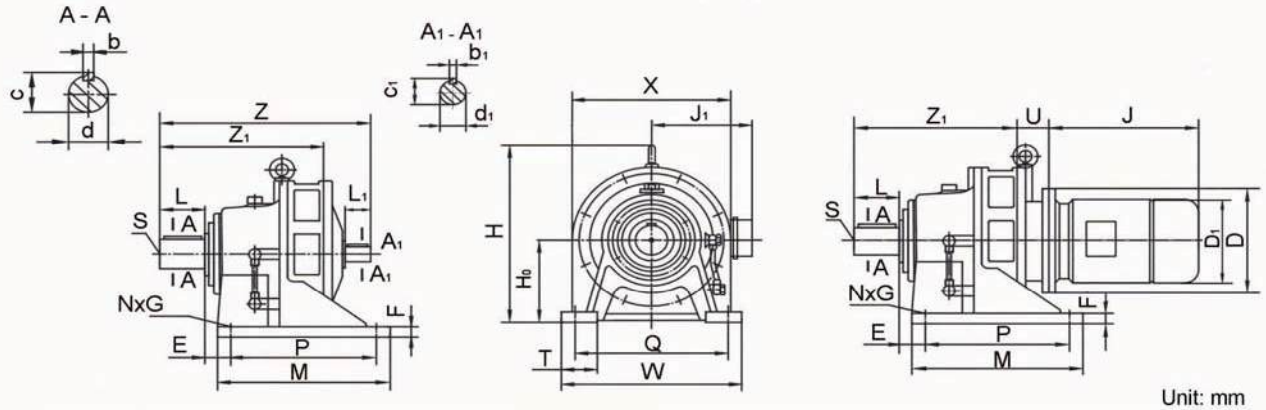

Unit: mm

Model	Center height	Installation dimensions							Shaft connecting dimensions					Overall dimensions					Double shaft type					
		E	P	Q	T	F	Foot hole N	Foot hole G	d	b	c	L	S	M	W	H	X	Z_1	d_1	b_1	c_1	L_1	Z	Weight (Kg)
X	H_0																							
1	100	25	90	150	40	12	4	12	25	8	28	35	M8	120	180	175	150	149	15	5	17	25	206	8
1C	100	35	90	150	40	12		11	28	8	31	35		130	180	207	168	142	15	5	17	25	202	11
2	100	53	90	180	45	15		12	25	8	28	34		120	210	184	168	156	15	5	17	25	215	14
2C	100	35	90	150	40	12		11	28	8	31	35		135	180	207	168	156	15	5	17	25	208	13
3	140	96	100	250	55	20		16	35	10	38	55		150	290	240	200	190	18	6	20.5	35	266	29
3C	120	55	115	190	55	15		14	38	10	41	55		155	230	257	200	192	18	6	20.5	35	259	24
4	150	95	145	290	65	22		16	45	14	48.5	74	M10	195	330	315	240	251	22	6	24.5	40	322	45
4C	150	30	145	290	65	22		18	50	14	53.5	90		195	330	300	240	260	22	6	24.5	40	341	44
5	160	115	150	370	75	25		16	55	16	59	91	M12	260	420	356	300	302	30	8	33	45	393	92
5C	160	49	150	370	75	25		18	60	18	64	90	M10	238	410	356	300	308	30	8	33	45	413	84
6	200	36	275	380	75	30		22	65	18	69	89	M12	335	430	425	340	353	35	10	38	54	460	131
7	220	36	320	420	85	30		22	80	22	85	109		380	470	460	364	394	40	12	43	65	515	165
8	250	35	380	480	120	35		22	90	25	95	120	M16	440	530	529	430	438	45	14	48.5	70	568	245
9	290	45	480	560	120	40		26	100	28	106	141	M20	560	620	614	500	529	50	14	53.5	80	674	390
10	325	80	500	630	120	45		30	110	28	116	150		600	690	706	580	608	55	16	59	100	774	564
11	420	122	330 x 2	800	160	50	6	32	130	32	137	202	2 - M20	810	880	883	710	811	70	20	74.5	120	1022	1160
12N	335		480	630	128	45	4	39	140	36	148	200	M24	580	720	729			65	18	69	105	877	614
13N	375		520	670	140	50		39	160	40	169	240	M30	630	780	815			80	22	85	130	1040	957
14N	400		590	770	160	55		45	170	40	179	300	M30	700	880	874			80	22	85	130	1150	1190

Matching IEC flange motor's dimension U, J, J_1, D, D_1

Unit: mm

Model	Dimensions	Matching Motor (Power Unit: kW)																			
		0.25	0.37	0.55	0.75	1.1	1.5	2.2	3	4	5.5	7.5	11	15	18.5	22	30	37	45	55
X		71M4A	71M4B	80M4A	80M4B	90S4A	90L4A	100L4A	100L4B	112M4A	132S4A	132M4A	160M4A	160L4A	200L6A	200L6B	225M6A	250M6A	280S6A	280M6A
1	U	70																		
1C		49.5		62.5																
2		70																		
2C		49.5		62.5		83		91												
3		71.5						81.5												
3C		73				83		91												
4		81																		
4C		101						111			102									
5		83									103									
5C		86						96			124		133							
6		88									106		136							
7		88									108		138							
8		140																		
9		140															172			
10		134															168			
11		177																		
12N		200																		
13N		193																		
14N		235																		
	J	225		245		260	285	320		335	385	425	490	535	660	700	790	835	900	
	J_1	120		145		150		175		185	205		255		305	335	395	435		
	D	160		200				250			300		350		400	450	550			
	D_1	145		165		180		205		225	265		330		395	450	515	585		

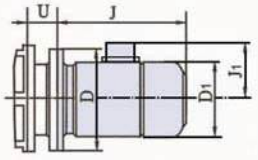

Horizontal

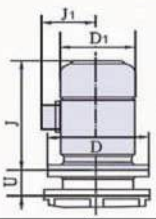

Vertical

Note: For multiple stages reductor, the model of this table is the high speed end (input end)
The parameters in this table is based on IEC's motor, only J, J_1 and D_1 can vary upon each brand.

2. Single-Stage Flange Mounted Dimensions

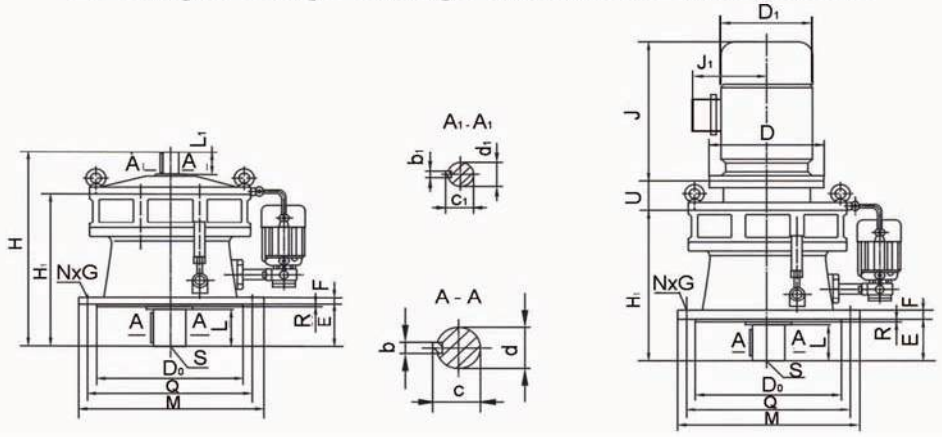

Unit: mm

Model	Installation dimensions							Shaft connecting dimensions					Overall dimensions		Double shaft type					
X	D_0	R	Q	E	F	Flange hole N	Flange hole G	d	b	c	L	S	H_1	M	d_1	b_1	c_1	L_1	H	Weight (Kg)
1	110	3	134	48	9	4	12	28	8	31	35	M8	157	160	15	5	17	25	214	8
1C	110		134	48	9	4		28	8	31	35		142	160					202	9
2	130		160	42	12	6		25	8	28	34		168	180					227	13
2C	110		134	48	9	4		28	8	31	35		156	160					208	11
3	170	4	200	50	15	6		35	10	38	45		190	230	18	6	20.5	35	266	26
3C	140		180	69	13			38	10	41	55		192	210					259	23
4	200		230	79	15			45	14	48.5	63	M10	250	260	22		24.5	40	332	38
4C	200		230	81	15		11	50	14	53.5	81		260	260	22	6	24.5	40	341	44
5	270		310	93	20		12	55	16	59	79	M12	302	340	30	8	33	45	393	93
5C	270		310	89	20		11	60	18	64	80	M10	208	340	30	8	33	45	413	84
6	316	5	360	92	22	8	16	65	18	69	80	M12	353	400	35	10	38	54	460	138
7	345		390	114			18	80	22	85	98		394	430	40	12	43	65	513	160
8	400	6	450	112	30	12		90	25	95	110	M16	438	490	45	14	48.5	70	568	240
9	455	8	520	170	35		22	100	28	106	129	M20	529	580	50		53.5	80	675	370
10	520	10	590	174	40			110		116	140		608	650	55	16	59	100	774	622
11	680		800	210	45		38	130	32	137	184	2 - M20	811	880	70	20	74.5	120	1022	1210
12N	485		560	250	40	8	33	140	36	148	200	M24		635	65	18	69	150	877	568
13N	535		610	295	45		33	160	40	169	240	M30		750	80	22	85	130	1040	865
14N	570		660	360	50		39	170	40	179	300	M30		750	80	22	85	130	1150	1125

Matching IEC flange motor's dimension U, J, J_1, D, D_1

Unit: mm

Model	Dimensions	Matching Motor (Power Unit: kW)																		
X		0.25	0.37	0.55	0.75	1.1	1.5	2.2	3	4	5.5	7.5	11	15	18.5	22	30	37	45	55
		71M4A	71M4B	80M4A	80M4B	90S4A	90L4A	100L4A	100L4B	112M4A	132S4A	132M4A	160M4A	160L4A	200L6A	200L6B	225M6A	250M6A	280S6A	280M6A
1	U	70																		
1C		49.5		62.5																
2		70																		
2C		49.5		62.5		83		91												
3		71.5						81.5												
3C		73				83		91												
4		81																		
4C		101						111			102									
5		83									103									
5C		86						96			124		133							
6		88									106		136							
7		88									108		138							
8		140																		
9		140															172			
10		134															168			
11		177																		
12N		200																		
13N		193																		
14N		235																		
	J	225		245		260	285	320		335	385	425	490	535	660		700	790	835	900
	J_1	120		145		150		175		185	205		255		305		335	395	435	
	D	160		200				250			300		350		400		450	550		
	D_1	145		165		180		205		225	265		330		395		450	515	585	

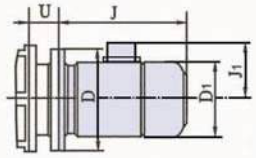

Horizontal

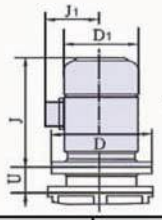

Vertical

Note: For multiple stages reductor, the model of this table is the high speed end (input end)
The parameters in this table is based on IEC's motor, only J, J_1 and D_1 can vary upon each brand.

3. Double-Stage Foot Mounted Dimensions

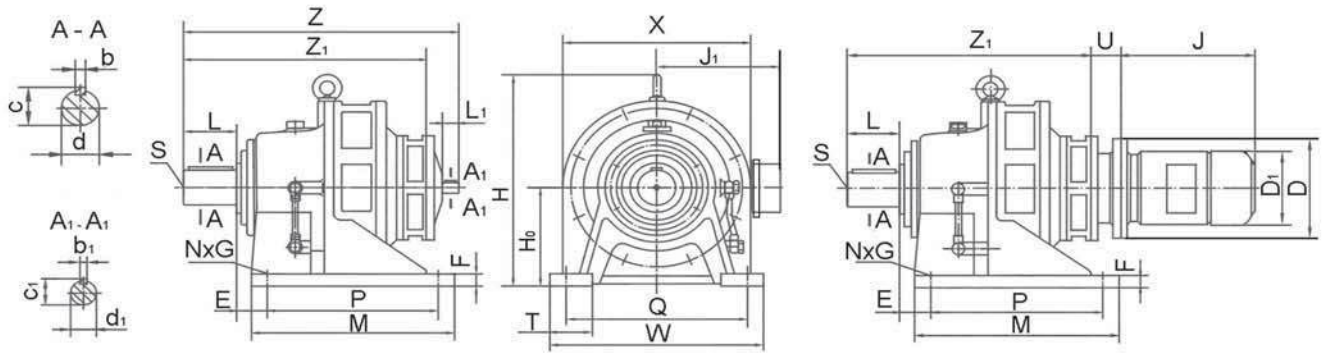

Unit : mm

Model	Center height	Installation dimensions							Shaft connecting dimensions					Overall dimensions					Double shaft type					
		E	P	Q	T	F	Foot hole N	Foot hole G	d	b	c	L	S	M	W	H	X	Z_1	d_1	b_1	c_1	L_1	Z	Weight (Kg)
XE	H_0																							
31	140	96	100	250	55	20	4	16	35	10	38	55	M8	150	290	240	200	258	15	5	17	25	317	37
42	150	95	145	290	65	22			45	14	48.5	74	M10	195	330	315	240	322					381	55
53	160	115	150	370	75	25			55	16	59	91	M12	260	420	356	300	380	18	6	20.5	35	457	94
63	200	36	275	380		30		22	65	18	69	89		335	430	425	340	442					519	148
74	220		320	420	85				80	22	85	109		380	470	460	364	508	22		24.5	40	589	193
84	250	35	380	480	120	35			90	25	95	120	M16	440	530	529	430	552					633	270
85																		566	30	8	33	45	656	310
95	290	45	480	560		40		26	100	28	106	141	M20	560	620	614	500	655					745	485
106	325	80	500	630		45		30	110		116	150		600	690	706	580	754	35	10	38	54	859	950
116	420	122	330 x 2	800	160	50	6	32	130	32	137	202	2 - M20	810	880	883	710	963					1071	1232
117																			40	12	43	65	1082	1280

Matching IEC Flange Motor's Dimensions U, J, J_1, D, D_1

Unit: mm

Model	Dimensions	Matching Motor (Power Unit: kW)												
		0.25	0.37	0.55	0.75	1.1	1.5	2.2	3	4	5.5	7.5	11	15
XE		71M4A	71M4B	80M4A	80M4B	90S4A	90L4A	100L4A	100L4B	112M4A	132S4A	132M4A	160M4A	160L4A
31	U	70												
42		70												
53		71.5												
63		71.5						81.5						
74		81												
84		81												
85		83												
95		83									103			
106		88									106			
116		88									106		136	
117		88									108		138	
	J	225		245		260	285	320		335	385	425	490	535
	J_1	120		145		150		175		185	205		255	
	D	160		200				250			300		350	
	D_1	145		165		180		205		225	265		330	

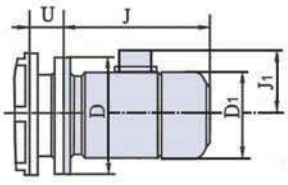

Horizontal

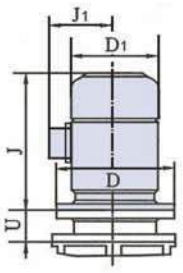

Vertical

Note: For multiple stages reductor, the model of this table is the high speed end (input end)
The parameters in this table is based on IEC's motor, D is the standard dimension for every brand of motor.

4. Double-Stage Flange Mounted Dimensions

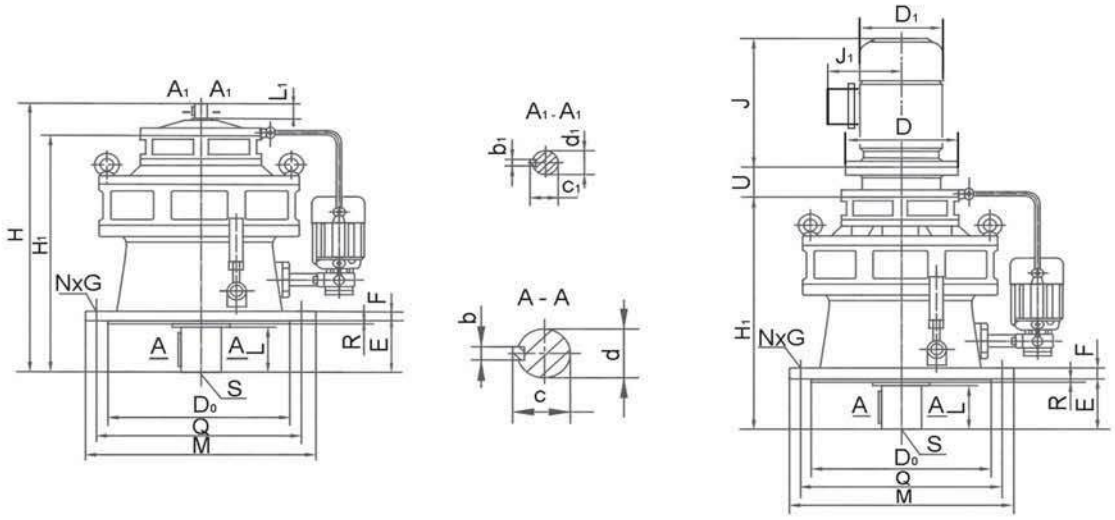

Unit: mm

Model	Installation dimensions							Shaft connecting dimensions					Overall dimensions		Double shaft type					
XE	D_0	R	Q	E	F	Flange hole N	Flange hole G	d	b	c	L	S	H_1	M	d_1	b_1	c_1	L_1	H	Weight (Kg)
31	170	4	200	50	15	6	12	35	10	38	45	M8	258	230	15	5	17	25	317	35
42	200		230	79				45	14	48.5	63	M10	321	260					380	55
53	270		310	93	20			55	16	59	79	M12	380	340	18	6	20.5	35	457	94
63	316	5	360	92	22	8	16	65	18	69	80		442	400					519	149
74	345		390	114			18	80	22	85	98		508	430	22		24.5	40	589	193
84	400	6	450	112	30	12		90	25	95	110	M16	552	490					633	280
85													566		30	8	33	45	656	310
95	455	8	520	170	35		22	100	28	106	129	M20	655	580					745	465
106	520	10	590	174	40			110		116	140		754	650	35	10	38	54	859	667
116	680		800	210	45		38	130	32	137	180	2 - M20	963	880					1069	1280
117															40	12	43	65	1082	1290

Matching IEC Flange Motor's Dimensions U, J, J_1, D, D_1

Unit: mm

Model	Dimensions	Matching Motor (Power Unit: kW)												
		0.25	0.37	0.55	0.75	1.1	1.5	2.2	3	4	5.5	7.5	11	15
XE		71M4A	71M4B	80M4A	80M4B	90S4A	90L4A	100L4A	100L4B	112M4A	132S4A	132M4A	160M4A	160L4A
31	U	70												
42		70												
53		71.5												
63		71.5						81.5						
74		81												
84		81												
85		83												
95		83									103			
106		88									106			
116		88									106		136	
117		88									108		138	
	J	225		245		260	285	320		335	385	425	490	535
	J_1	120		145		150		175		185	205		255	
	D	160		200				250			300		350	
	D_1	145		165		180		205		225	265		330	

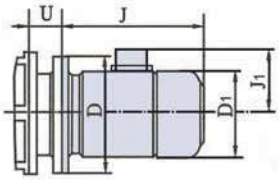

Horizontal

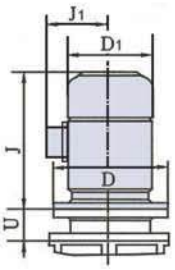

Vertical

Note: For multiple stages reductor, the model of this table is the high speed end (input end)
The parameters in this table is based on IEC's motor, D is the standard dimension for every brand of motor.

5. Triple-Stage Foot Mounted Dimensions

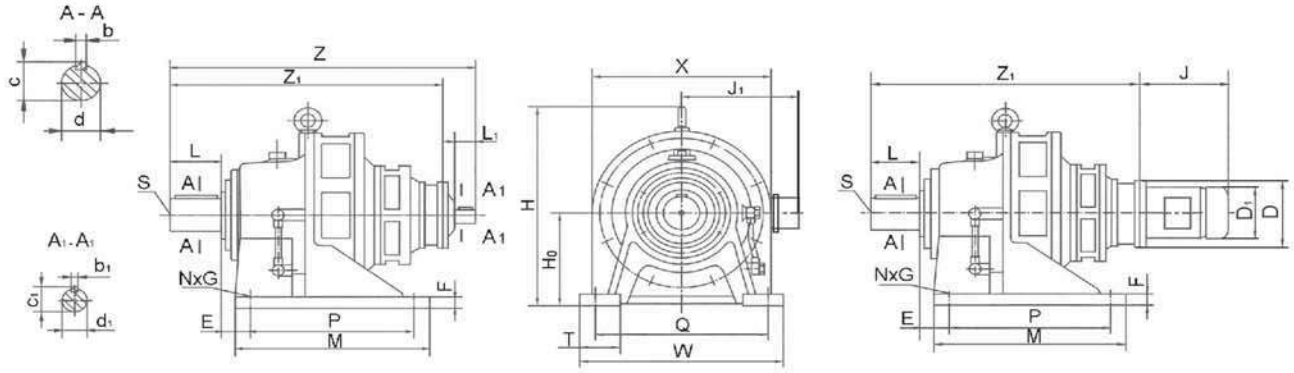

Unit : mm

Model	Center height	Installation dimensions							Shaft connecting dimensions					Overall dimensions					Double shaft type					
		E	P	Q	T	F	Foot hole N	Foot hole G	d	b	c	L	S	M	W	H	X	Z_1	d_1	b_1	c_1	L_1	Z	Weight (Kg)
XS	H_0																							
642	200	36	275	380	75	30	4	22	65	18	69	89	M12	335	430	425	340	536	15	5	17	25	592	186
742	220		320	420	80				80	22	85	109		380	470	460	360	575					633	201
842	250	35	380	480	120	35			90	25	95	120	M16	440	530	529	430	623					682	295
852																		638					697	345
853																		648	18	6	20.5	35	722	352
952	290	45	480	560		40		26	100	28	106	141	M20	560	620	614	500	727	15	5	17	25	786	473
953																		737	18	6	20.5	35	811	478
1063	325	80	500	630		45		30	110		116	150		600	690	706	580	843					917	667
1064	420	122	330 x 2	800	160	50	6	32	130	32	137	202	2 - M20	810	880	883	710	1072	22		24.5	40	1154	1300
1174																		1074					1156	1315

Matching IEC Flange Motor's Dimensions U, J, J_1, D, D_1

Unit: mm

Model	Dimensions	Matching Motor Power Unit: kW								
		0.25	0.37	0.55	0.75	1.1	1.5	2.2	3	4
XS		71M4A	71M4B	80M4A	80M4B	90S4A	90L4A	100L4A	100L4B	112M4A
642		70								
742		70								
842		70								
852		70								
853		71.5								
952		70								
953		71.5						81.5		
1063		71.5						81.5		
1064				81						
1174				81						
	J	225		245		260	285	320		335
	J_1	120		145		150		175		185
	D	160		200				250		
	D_1	145		165		180		205		225

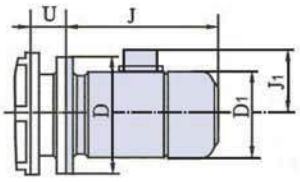

Horizontal

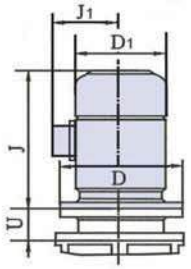

Vertical

Note: For multiple stages reductor, the model of this table is the high speed end (input end)
The parameters in this table is based on IEC's motor, D is the standard dimension for every brand of motor.

6. Triple-Stage Flange Mounted Dimensions

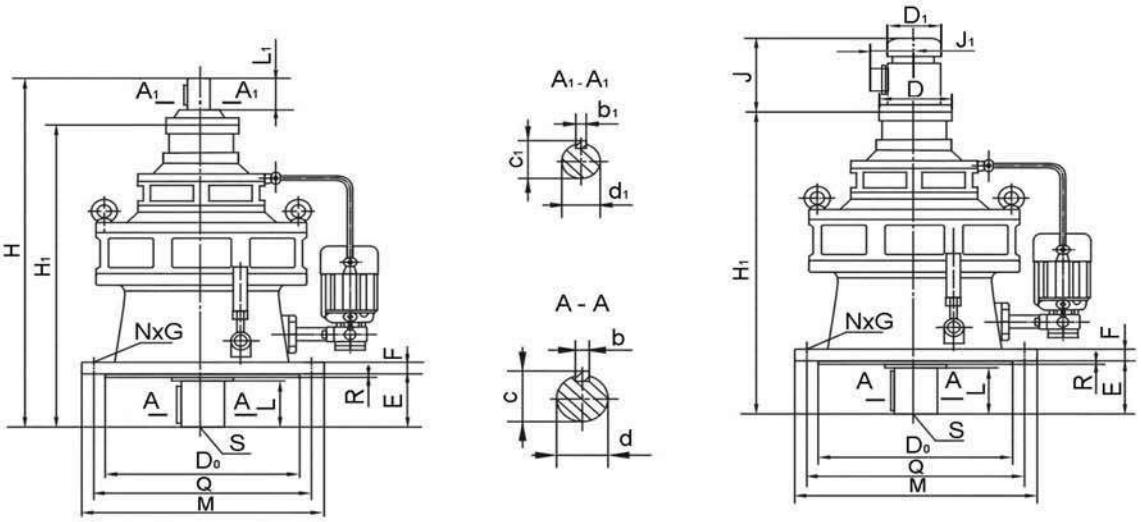

Unit: mm

Model	Installation dimensions							Shaft connecting dimensions					Overall dimensions		Double shaft type					
	D_0	R	Q	E	F	Flange hole		d	b	c	L	S	H_1	M	d_1	b_1	c_1	L_1	H	Weight (Kg)
XS						N	G													
642	316	5	360	92	22	8	16	65	18	69	80	M12	536	400	15	5	17	25	592	186
742	345		390	114				80	22	85	98		575	430					633	201
842	400	6	450	112	30	12	18	90	25	95	110	M16	623	490					682	295
852													638						697	345
853													648		18	6	20.5	35	722	352
952	455	8	520	170	35		22	100	28	106	129	M20	727	580	15	5	17	25	786	473
953													737		18	6	20.5	35	811	478
1063	520	10	590	174	40			110		116	140		843	650					917	667
1064	680		800	210	45		38	130	32	137	184	2 - M20	1072	880	22		24.5	40	1154	1300
1174													1074						1156	1315

Matching IEC Flange Motor's Dimensions U, J, J_1, D, D_1

Unit: mm

Model	Dimensions	Matching Motor Power Unit: kW								
		0.25	0.37	0.55	0.75	1.1	1.5	2.2	3	4
XS		71M4A	71M4B	80M4A	80M4B	90S4A	90L4A	100L4A	100L4B	112M4A
642		70								
742		70								
842		70								
852		70								
853		71.5								
952		70								
953		71.5						81.5		
1063		71.5						81.5		
1064				81						
1174				81						
	J	225		245		260	285	320		335
	J_1	120		145		150		175		185
	D	160		200				250		
	D_1	145		165		180		205		225

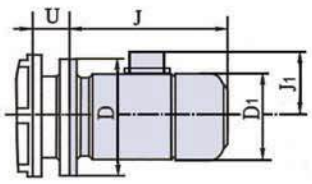

Horizontal

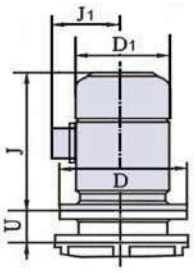

Vertical

Note: For multiple stages reductor, the model of this table is the high speed end (input end)
The parameters in this table is based on IEC's motor, D is the standard dimension for every brand of motor.

Lubrication

1. The below table is for you as reference to choose the lubricating oil and methods. X5 model as well as the following model of reducer in single-stage, or vertical or horizontal type, XE53 model as well as the following double-stage, or vertical or horizontal reducers have been lubricated by grease as they are filled with #00 lubricating grease before leaving factory. The other models of reducer are oil lubricated by external forced circling lubrication which are not filled with lubricating oil. Users should fill it with enough lubricating oil before operation. Before starting, first switch on the oil pump motor to check if the oil supply is ok. In case of oil failure, change the wire connection of oil pump motor to shift the rotation direction, so as to keep the normal oil supply. Then you are supposed to check the oil level of lubricating oil. It's necessary to check and clean the oil filter regularly to avoid blocking and affecting the lubricating performance. The interface between oil pump and reducer need an O seal to mount on. Otherwise, the leakage may happen.

2. Fill or change the oil: After running for one work since filling oil first time, the oil should be changed. While changing, keep the oil pool clean. Renew the oil every 3-6 months in future. However, the interval should be shortened in case that the ambient temperature and humidity is high. While working at excessive high or low ambient temperature (beyond -10 °C - +50 °C), please note that the lubricating oil is ok or not, or contact us directly. Make sure that the lubricating oil should be in a proper level. Fill to supplement the oil after opening the vent on base or flange. Do not mix different brand of oil.

Lubricating Oil Selection Table

Model			Mounting Mode		Lubricating Oil	
Single-stage	Double-stage	Triple-stage	Horizontal	Vertical	Ambient Temp.(°C)	Grade
X1~X5	XE31~XE53	-----	Lubricating Grease		-10~+50	00
X6~X7	XE63~XE64	XS642~XS1174	-----	Lubricating-Grease		
			Oil-bathing	-----	-10~+5	EP68
					0~35	EP150
X8~X14N	XE84~XE117	XS642~XS1174	Oil-bathing	Gear Pump	35~50	EP220-460

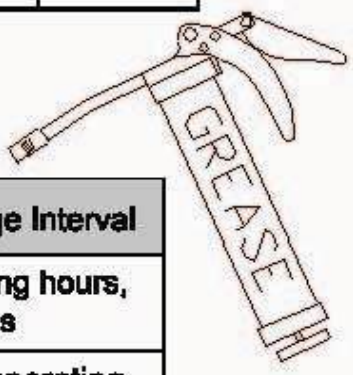

Oil Change Interval

Operating Condition	Recommended Oil Change Interval
Initial oil change after startup	after approx. 5000 operating hours, at the latest after 6 months
Subsequent oil changes	every 6 months or 5000 operating hours

Table Mild EP Oil Brand Recommended

Ambient temp.	Esso Oil	Mobil Oil	Shell Oil	Castrol	BP Oil
-10°C to 35°C	Spartan EP 68	Mobil gear 626 (ISO VG 68)	Omala Oil 68		Energol GR-XP 68
0°C to 35°C	Spartan EP 100 EP 150	Mobil gear 627 629 (ISO VG 100, 150)	Omala Oil 100 150		Engergol GR-XP 100 GR-XP 150
30°C to 50°C	Spartan EP 220 EP 320 EP 460	Mobil gear **630 AS standard** 633 634 (ISO VG 220 ~ 460)	Omala Oil 220 320 460	Alpha SP 220 Optigear BM 220 Tribol 1100/220	Energol GR-XP 220 GR-XP 320 GR-XP 460

Volume of Grease and Oil Filling

Unit: litres

	Frame Size	1	2	3	4	5	6	7	8	9	10	11	12N	13N	14N
Single Reduction	Type	GREASE					OIL								
	Horizontal	0.2	0.3	0.5	0.6	0.8	1.7	2.2	4	7	14	30	16	21	29
	Vertical	0.2	0.3	0.5	0.6	0.8	1.9	2	3.7	10	15	29	15	42	51

	Frame Size	31	42	52	53	63	64	84	85	94	95	106	116	117
Double Reduction	Type	GREASE				OIL								
	Horizontal	0.5	0.7	0.9	1	2.2	3.3	5.5	6	9	10	16	34	35
	Vertical	0.5	0.7	0.9	1	1.9	2.2	4	4	10	10	15	28	29

SIDE GLASS MARKERS

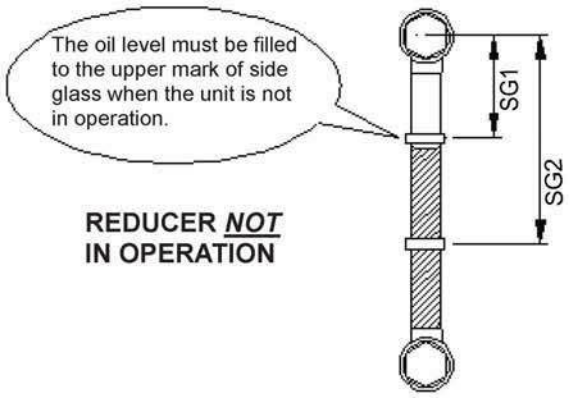

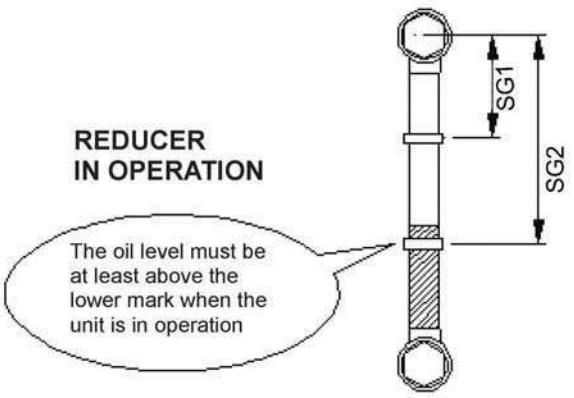

NOTE !

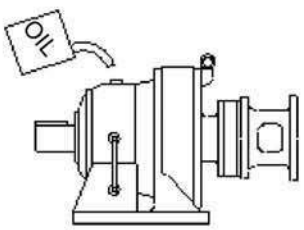

Oil flows **SLOWER** toward the first reduction stage

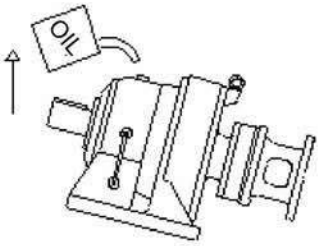

Raise the output shaft up helps oil reaching the first reduction stage **EASIER** and **QUICKER**

Daily Inspections

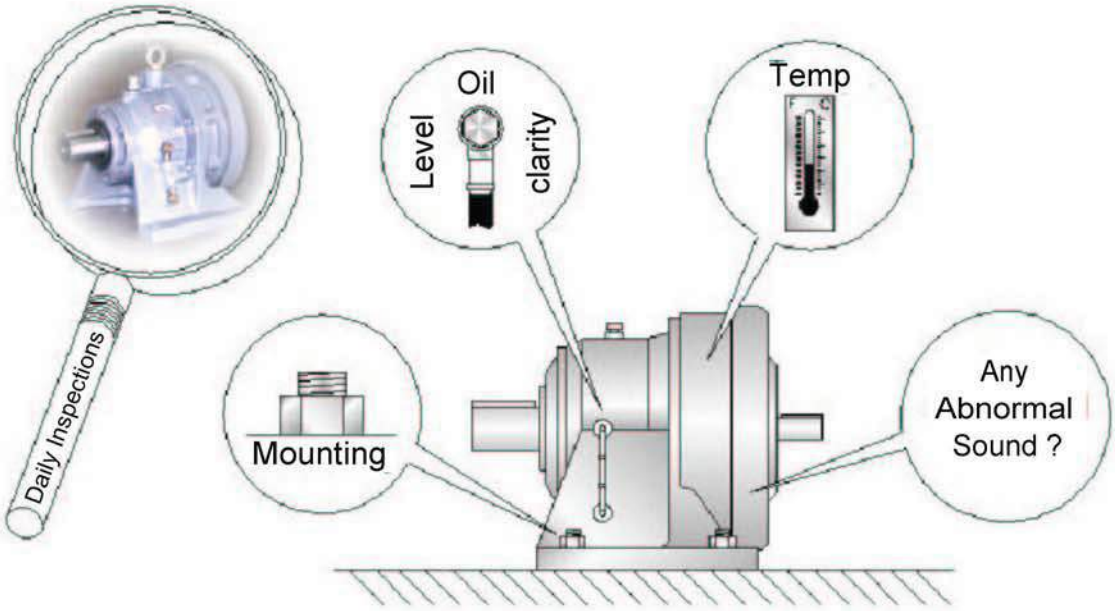

MOUNTING FASTENERS

Inspect mounting bolts of the FORCE Cycloidal Reducer to your equipment. Please make sure the foot or flange of speed reducer is tightened down rigidly to the mounting base. Tighten loose bolts as necessary. If bolts are loose frequently, reinforce the mounting structure and consider using double nuts on each bolt. Use bolts of ISO grade 8.8 minimum when mounting the flange or feet of the FORCE Cycloidal Reducer to your equipment.

LUBRICATING OIL

Check lubricating oil level. The oil level must be filled to the upper marker of side glass when the unit is not in operation. The oil level must be at least above the lower mark when the unit is in operation. Please be aware that the oil-lubricated double reduction models require extra oil to ensure the first reduction stage receives sufficient lubrication. Please refer to the lubrication section of this catalog or installation manual. Changing the lubricating oil frequently will further enhance the service life of FORCE Cycloidal Reducers. Refer to the lubrication section of this catalog for further information.

TEMPERATURE RISE

Any temperature rise up to 105 °F (58 °C) above ambient temperature on the surface of the ring gear housing is considered normal. Check for any rapid temperature rise from a stable operating condition. If such a phenomenon occur, add the recommended oil or grease (refer to the lubrication section). If the rapid temperature rise still persists, stop operation and contact factory.

ABNORMAL SOUND

If you start hearing sudden abnormal sound generated from inside the unit, stop operation and inspect the unit. Check mounting bolts and the installation of sheaves and sprockets. Make sure there are sufficient lubrication inside the reducer. Please observe, lower reduction ratios of cycloidal reducers are subject to higher operating sound level due to higher internal speed. This phenomenon is considered normal.

Installation

⚠ WARNING

✓ SAFE !

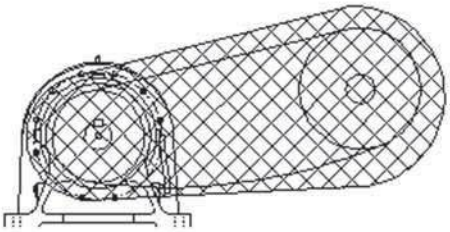

✗ UNSAFE !

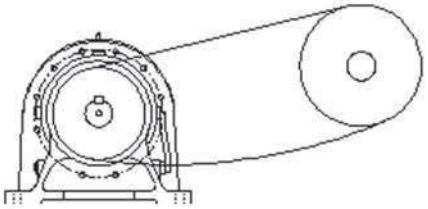

✓GOOD !

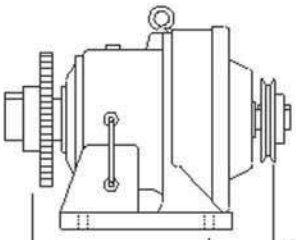

Place sprocket close to the collar surface.

Mounting Rigidity

Place sheave close to the collar surface.

✗ BAD !

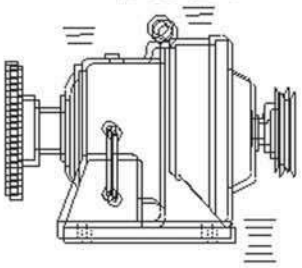

Incorrect installation of sheave and sprocket contributes to excessive overhung load.

Loosened fasteners cause speed reducer to vibrate

✓GOOD !

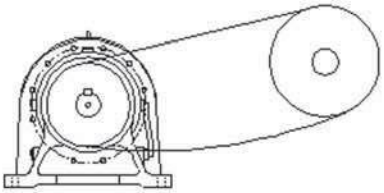

The non-pulling side of chain should remain slack.

✗ BAD !

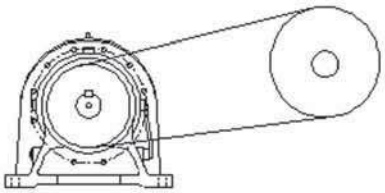

Overtightening chain on both strands can cause excessive overhung load on output shaft bearing.

✓GOOD !

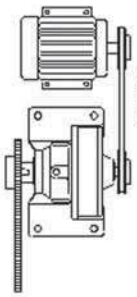

Alignment between two sheaves needs to be square and parallel.

Alignment between two sprockets are not needs to be square and parallel.

✗ BAD !

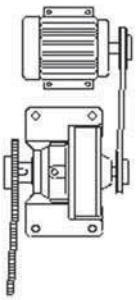

Alignment between two sheaves are not square and parallel.

Alignment between two sprockets are not square and parallel.

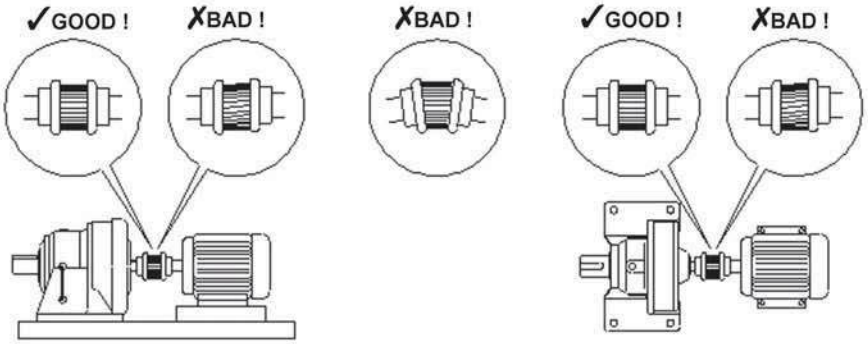

Good Design Practices

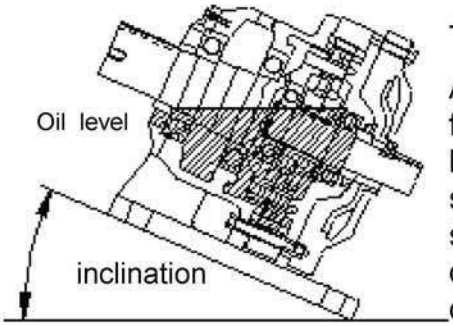

- Follow Installation Instructions

A key pre-requisite for the long-lasting, trouble-free operation is to follow installation and lubrication instructions. There are individual sections in this catalog that cover these topics specifically. For installation on an inclination on declination plane, though there are no specific data on what the allowable angles are for each frame size, the following rule of thumb applies. Please refer to drawing above. Each oil lubricated FORCE Cycloidal Reducer is capable of being installed at an angle as long as the oil level reaches at least the bottom of the rolling elements. This ensures all torque transmitting components are lubricated during the operation.

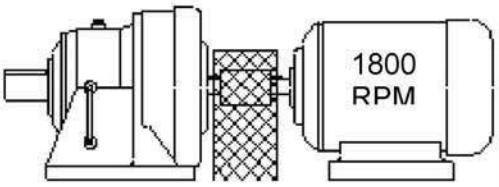

-Motor RPM Not To Exceed 1800

Speed reducers and high-speed motors (i.e. 3600 rpm) are typically not compatible with each other. We recommend input speed to the FORCE Cycloidal Reducers not to exceed 1800 rpm. Some larger models have input speed limit capped at 1200 rpm. If your application absolutely requires higher input speed than the recommended rpms above, please contact factory as we may have to implement special lubricating consideration to compensate for such unusual input speeds.

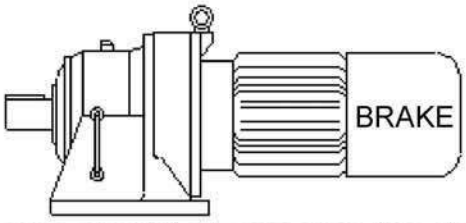

- Consideration For Brake Load

In applications where brake is used on the input of speed reducer, if the torque rating of brake exceeds the motor torque rating, you should always use the torque rating of brake to size up the speed reducers. For applications involving frequent start/stop, an additional service factor (i.e. S.F. = 2.0) will help enhancing the superb performance of FORCE Cycloidal Reducers.

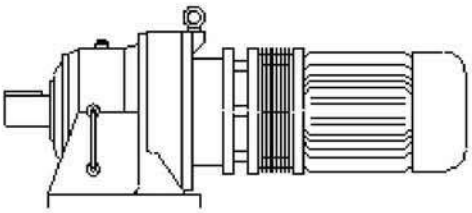

-Clutch Applications

Similar to the applications involving the use of brakes, you may want to consider an additional service factor (i.e. S.F. = 2.0) for the frequent start/stop of clutch. This will help alleviating the effect of metal fatigue caused by high frequency start/stop of the application. Periodically check the mounting rigidity and the tightness of fasteners.

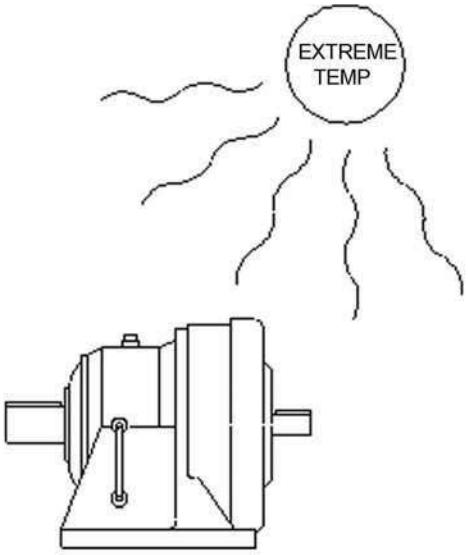

- Extreme Temperature Applications

Extreme heat and cold could very well be the two worst enemies for any speed reducers. Special lubrication, good ventilation, and controlled ambient temperature would greatly help speed reducers to avoid trouble caused by extreme temperatures. Use high viscosity lubricant for high temperature applications. Use low viscosity lubricant for low temperature applications. In applications where speed reducers are close to the heat source and air is not well circulated, consider using a blower fan. Consider using a heat source or radiator for speed reducer operating under extreme cold temperature. For applications that experience both extremes of temperature, make sure to use appropriate lubricant that can handle both extremes of heat and cold.

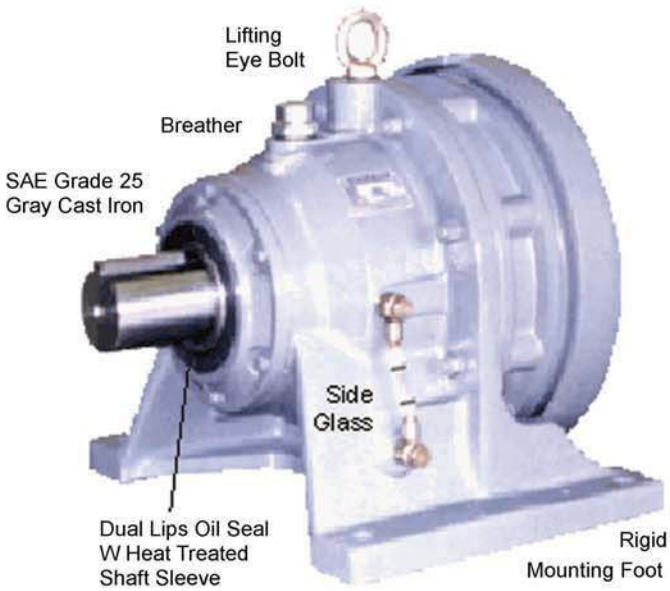



FORCE Cycloidal Reducers - Parts List (Single Reduction)

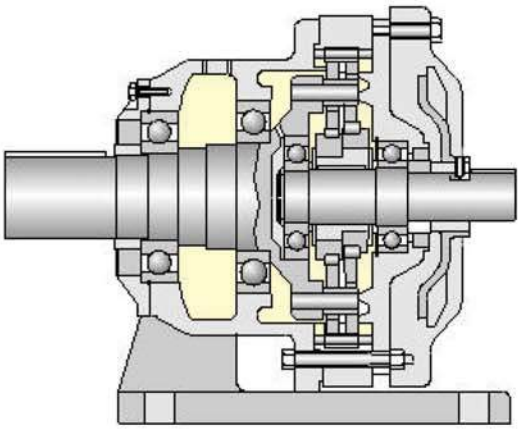

Each FORCE Cycloidal Speed Reducer is constructed with three major sub-assemblies: output sub-assembly, ring gear sub-assembly, and input sub-assembly.

The input and output sub-assemblies are generic within each frame size. That is, disregard what the reduction ratio is (between 7:1 and 119:1), the same input and output assemblies are used to assemble speed reducers in the same frame size. The ring gear sub-assembly determines the reduction ratio of a FORCE Cycloidal Reducer.

Listed below are the code names for each component inside the cycloidal speed reducer. This Parts List includes only components that may require repair or replacement during the rebuild. Components that are very unlikely to subject to replacement are not listed here.

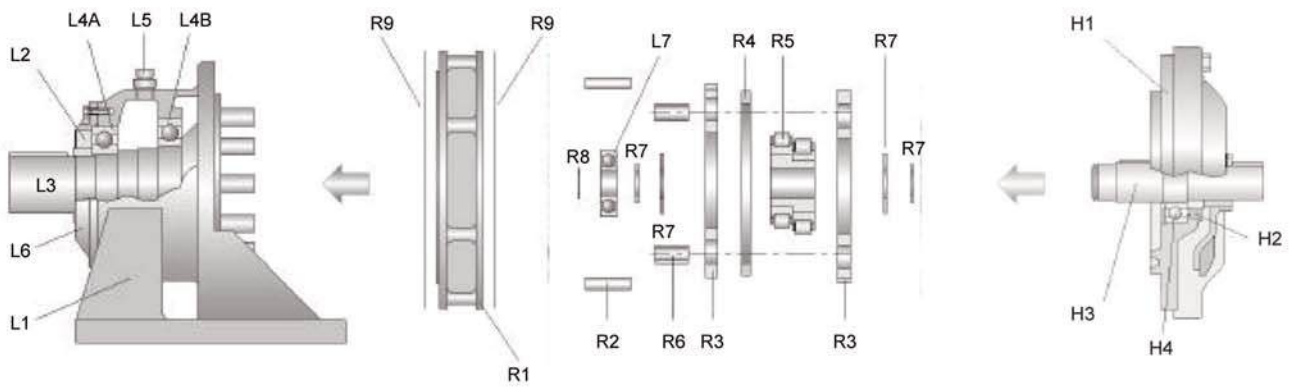

OUTPUT SUB-ASSEMBLY
**Generic within each frame*

Major Components:
L1 - Output Casting
L2 - Oil Seal
L3 - Slow Speed Shaft with Pins
L4A - Slow Speed Shaft Bearing
L4B - Slow Speed Shaft Bearing
L5 - Oil Filler Cap
L6 - Oil Seal Housing
L7 - High Speed Shaft End Bearing

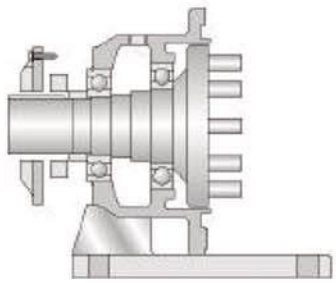

RING GEAR SUB-ASSEMBLY
**The Reduction Ratio Kit*

Major Components:
R1 - Ring Gear Casting
R2 - Ring Gear Pins/Rollers
R3 - Cycloidal Disc(s)
R4 - Cycloidal Disc Spacer
R5 - Eccentric Bearing
R6 - Slow Speed Shaft Rollers
R7 - Bearing Spacers
R8 - Snap Ring
R9 - Gasket Set



INPUT SUB-ASSEMBLY
**Generic within each frame*

Major Components:
H1 - Input Cap
H2 - Oil Seal
H3 - High Speed Shaft
H4 - High Speed Shaft Bearing

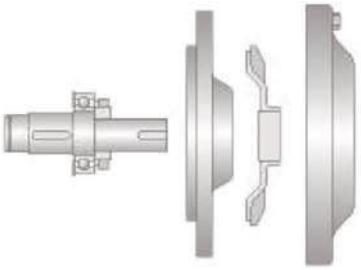

FORCE Cycloidal Reducers - Parts List (Double Reduction)

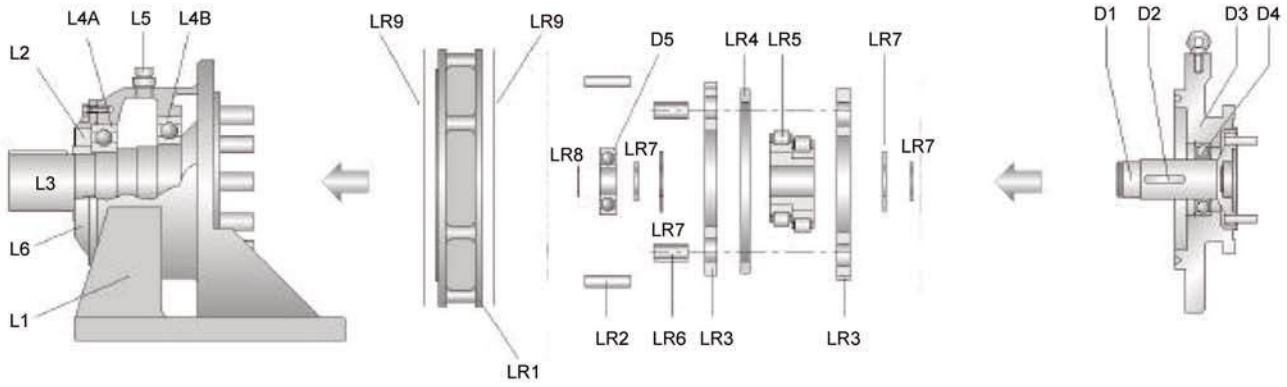

OUTPUT SUB-ASSEMBLY

Major Components:
L1 - Output Casting
L2 - Oil Seal
L3 - Slow Speed Shaft with Pins
L4A - Slow Speed Shaft Bearing
L4B - Slow Speed Shaft Bearing
L5 - Oil Filler Cap
L6 - Oil Seal Housing
D5 - Double Stage Shaft End Bearing

RING GEAR SUB-ASSEMBLY
(Second Stage Ring Gear)

Major Components:
LR1 - Ring Gear Casting
LR2 - Ring Gear Pins/Rollers
LR3 - Cycloidal Disc(s)
LR4 - Cycloidal Disc Spacer
LR5 - Eccentric Bearing
LR6 - Slow Speed Shaft Rollers
LR7 - Bearing Spacers
LR8 - Snap Ring
LR9 - Gasket Set

DOUBLE STAGE KIT
(Connects First Stage and Second Stage Ring Gears)

Major Components:
D1 - Double Stage Intermediate Shaft
D2 - Eccentric Bearing Key
D3 - Double Stage Casting
D4 - Double Stage Shaft Bearing
H6 - High Speed Shaft End Bearing
(please refer to the diagram below)

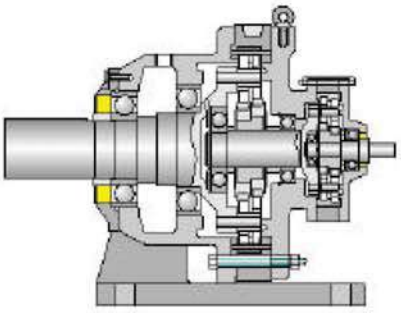

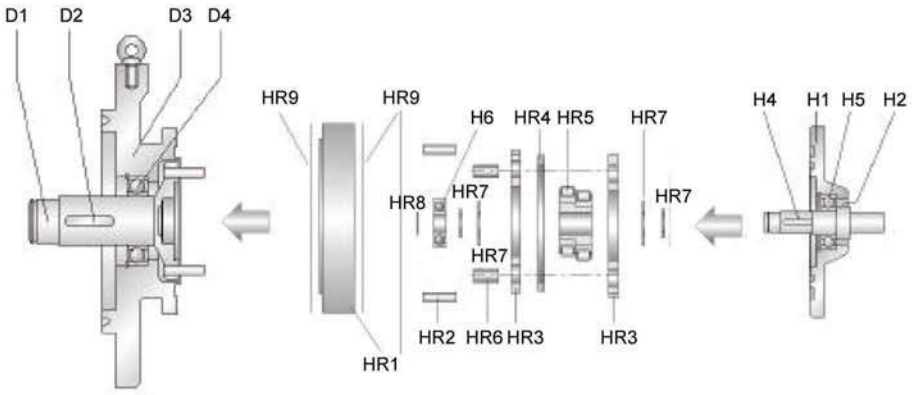

RING GEAR SUB-ASSEMBLY
(First Stage Ring Gear)

Major Components:
HR1 - Ring Gear Casting
HR2 - Ring Gear Pins/Rollers
HR3 - Cycloidal Disc(s)
HR4 - Cycloidal Disc Spacer
HR5 - Eccentric Bearing
HR6 - Slow Speed Shaft Rollers
HR7 - Bearing Spacers
HR8 - Snap Ring
HR9 - Gasket Set

INPUT SUB-ASSEMBLY

Major Components:
H1 - Input Cap
H2 - Oil Seal
H4 - High Speed Shaft
H5 - High Speed Shaft Bearing
H6 - High Speed Shaft End Bearing

How To Assemble a FORCE Cycloidal Reducer ?

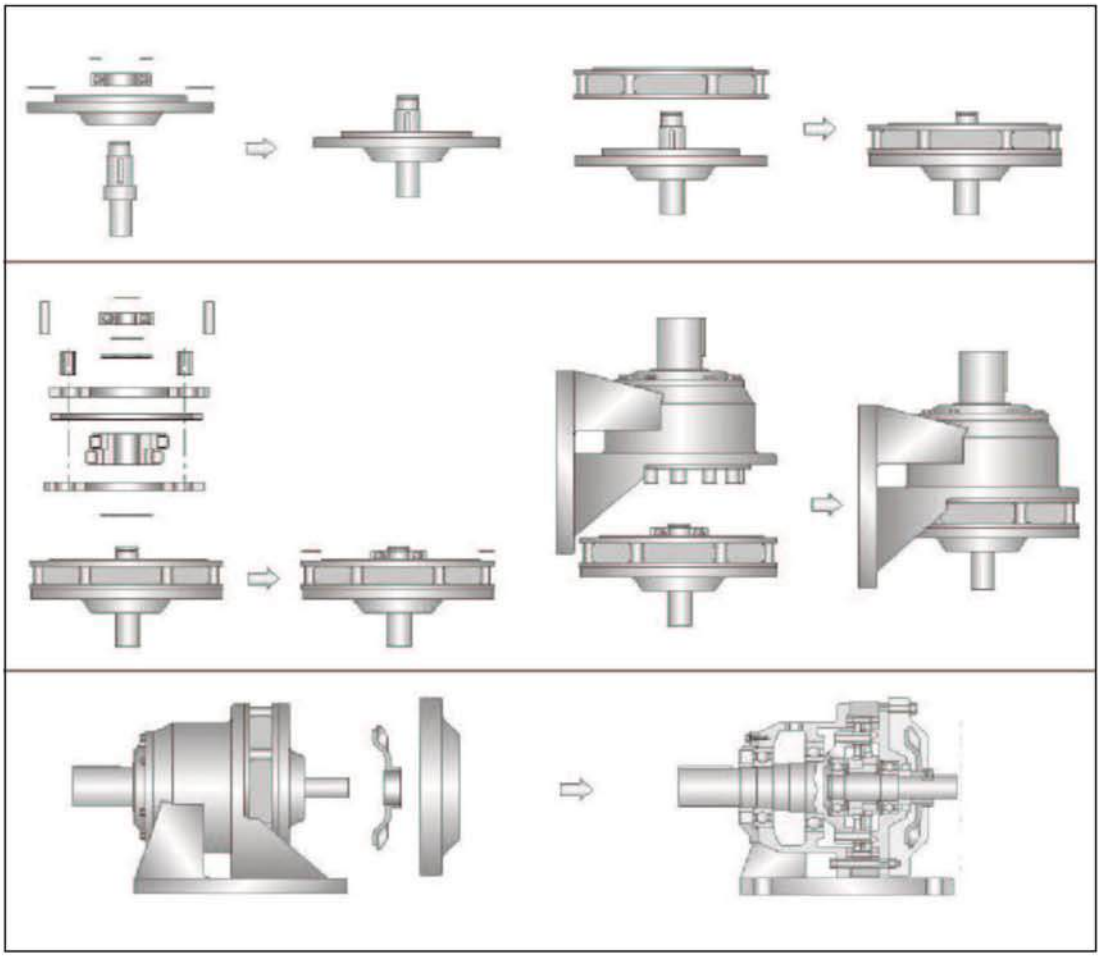

1. Put bearing into input cap. Secure bearing with snap ring. Put high speed shaft into bearing.
2. Put gasket on input cap. Put ring gear housing on top of input cap.
3. Place the bearing spacer on top of the high speed shaft bearing.
4. Place eccentric bearing key on internal key slot of high speed shaft.
5. Place first cycloidal disc on top of input cap.
6. Insert eccentric bearing. Place disc spacer on top of the first cycloidal disc.
7. Place the second cycloidal disc on top of the disc spacer. Make sure it is 180 degree offset from the first disc, otherwise the unit will not turn.
8. Insert low speed shaft rollers between two discs. Turn the high speed shaft and make sure it can be turned freely and the low speed shaft rollers are free to turn.
9. Place bearing spacer on top of eccentric bearing.
10. Insert high speed shaft end bearing into shaft.
11. Secure high speed shaft end bearing with snap ring.
12. Place gasket on top of ring gear housing.
13. Place output sub-assembly on top of ring gear housing, and tighten the unit with fasteners.Turn high speed shaft and make sure unit can be turned freely.

* Contact factory for a more detailed assembly manual covering individual frame sizes and models

Frequency and Voltage Situation in the World

Area	Country	Frequency (Hz)	Voltage
North America	America	60	Single phase 115V/230V,3-phase 230V
	Canada	60	Single phase 120V/347V,3-phase 230V,460V,575V
Asia	Korea	60	Single phase 110V/220V,3-phase 220V/380V
	Japan	50/60	Single phase 100V/200V,3-phase 200V
	Taiwan	60	Single phase 110V/220V,3-phase 200V,220V,380V
	Hong Kong	50	Single phase 200V/220V,3-phase 346V/380V
	China	50	Single phase 220V,3-phase 220V/380V
	Philippines	60	Single phase 220V,3-phase 380V
	Thailand	50	Single phase 220V,3-phase 220/380V
	Singapore	50	Single phase 230V,3-phase 415V
	Malaysia	50	Single phase 240V,3-phase 415V
	Indonesia	50	Single phase 220V,3-phase 380V
	India	50	Single phase 40V,3-phase 240V/415V
	Bangladesh	50	Single phase 230V,3-phase 400V
Oceania	Australia	50	Single phase 240V,3-phase 415V
	Guam	60	Single phase 120V,3-phase 240V/480V
	New Zealand	50	Single phase 230V,3-phase 230V/415V
Europe	Austria	50	Single phase 230V,3-phase 400V
	Belgium	50	Single phase 230V,3-phase 400V
	Bulgaria	50	Single phase 220V,3-phase 380V
	Denmark	50	Single phase 230V,3-phase 400V
	Finland	50	Single phase 230V,3-phase 400V
	France	50	Single phase 230V,3-phase 400V
	Germany	50	Single phase 230V,3-phase 400V
	Greece	50	Single phase 230V,3-phase 400V
	Hungary	50	Single phase 220V,3-phase 380V
	Italy	50	Single phase 220V,3-phase 380V
	Luxembourg	50	Single phase 230V,3-phase 400V
	Netherlands	50	Single phase 230V,3-phase 400V
	Norway	50	Single phase 220V/230V,3-phase 380V
	Poland	50	Single phase 220V,3-phase 380V
	Portugal	50	Single phase 230V,3-phase 400V/480V
	Romania	50	Single phase 220V,3-phase 380V
	Spain	50	Single phase 127V/220V,3-phase 220V/380V
	Sweden	50	Single phase 230V/400V,3-phase 400V/690V
	Switzerland	50	Single phase 230V,3-phase 400V
	United Kingdom	50	Single phase 230V,3-phase 400V

How to Refer to the Rating Plate

Rating Plate for FORCE Reducer

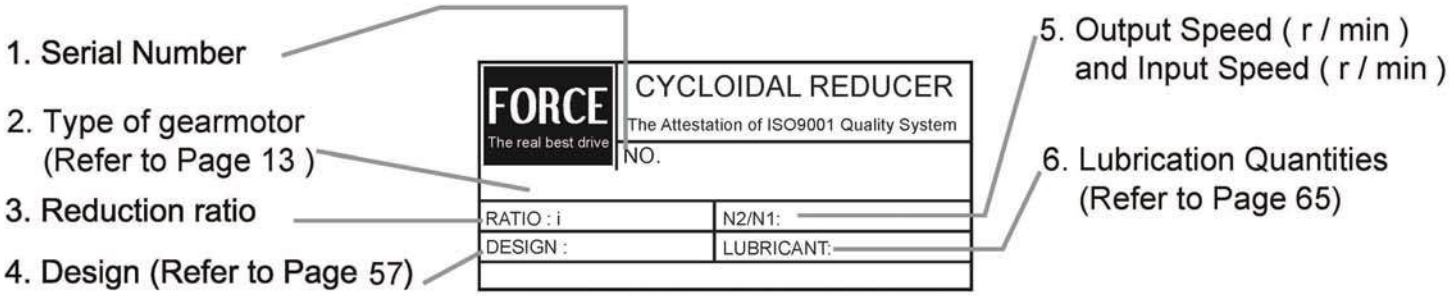

Rating Plate for IEC Motor (Upon each brand)

For Example :

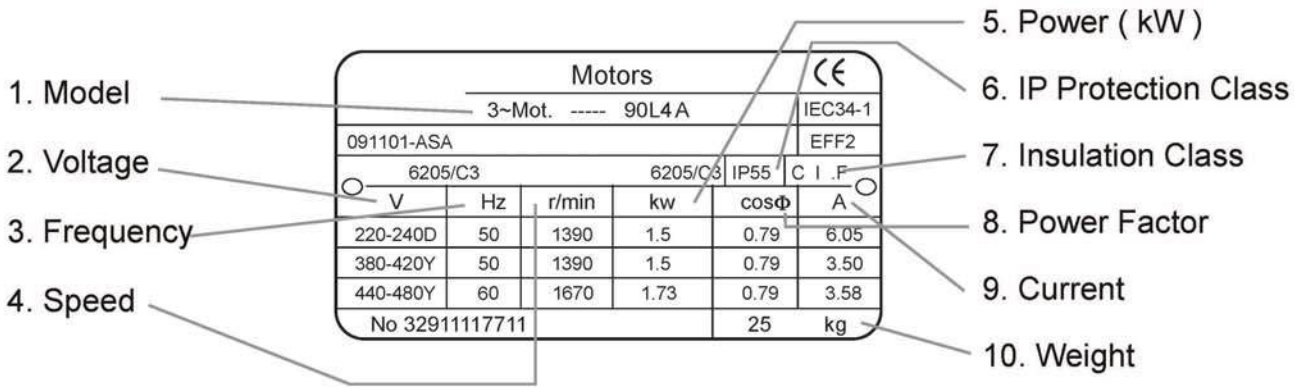

Warranty

The scope of our warranty for our products is limited to the range of our manufacture.
Warranty (period and contents)

Warranty Period	The warranty for new Cycloidal,unit shall be 12 months from date of shipment.
Warranty Condition	In the event that any problem or damage to the Product arises during the"Warranty period" from defects in the Product whenever the Product is properly installed and combined with the Buyer's equipment or machines, maintained as specified in the maintenance manual, and properly operated under the conditions described in the catalog or as otherwise agree upon in writing between the Seller and the Buyer or its customers; the Seller will provide, at its sole discretion, appropriate repair or replacement of the Product without charge at a designted facility, except as stipulated in the "Warranty Exclusions" as described below. However, if the Product is installed or integrated into the Buyer's equipment or machines, the Seller shall not reimburse the cost of: removal or re-installation of the Product or other incidental costs related thereto, any lost opportunity, any profit loss or other incidental or consequential losses or damages incurred by the Buyer or its customers.
Warranty Exclusions	Notwithstanding the above warranty, the warranty as set forth herein shall not apply to any problem or damage to the Product that is caused by: 1. installation, connection, combination or integration of the Product in or to the other equipment or machine that is rendered by any person of entity other than the Seller; 2. insufficient maintenance or improper operation, by the Buyer or its customers, such that the Product is not maintained in accordance with the maintenance manual provided or designated by the Seller; 3. improper use or operation of the Product by the Buyer or its customers that is not informed to the Seller, including, without limitation, the Buyer's or its customers operation of the Product not in conformity with the specifications, or use of lubricating oil in the Product that is not recommended by the Seller; 4. any problem or damage on any equipment or machine to which the Product is installed, connected or combined or on any specifications particular to the Buyer or its customers; 5. any changes, modifications improvements or alterations to the Product or those functions that are rendered on the Product by any person or entity other than the Seller; 6. any parts in the Product that are supplied or designated by the Buyer or its customers; 7. earthquake, fire, flood, sea-breeze, gas, thunder, acts of God or any other reasons beyond the control of the Seller; 8. normal wear and tear, or deterioration of the Product's parts, such as bearings, oil-seals ; 9. any other troubles, problems or damage to the Product that are not attributable to the Seller.

FORCE X-SERIES CYCLOIDAL REDUCER SELECTION METHOD

1. **Type of your machine**
   Example : Conveyors (Chain) – Heavy Duty, Type of Load is M (p.12)

2. **Daily operation period (hours/day)**
   Example : 10 hours/day (p.13)

3. **Number of starts-stops (Times/hour)**
   Example : 150 Time/hour, Service factor (S.F.) should not be less than 1.95 (p.13)

4. **Motor power (kW or HP) or Torque (N.m)**
   Example : 0.75 kW, 4 poles

5. **Voltage (V) and Frequency (Hz)**
   Example : 380 V and 50 Hz

6. **Output Speed (RPM) or Ratio**
   Example : 100 RPM, Choose X2 with Ratio 15 or 93 RPM, S.F. = 2.07 (p.32)

7. **Mounting Position (Vertical or Horizontal)**
   Example : Horizontal

8. **Mounting Style (Foot or Flange)**
   Example : Foot mounted

9. **Slow Speed Shaft Direction (Horizontal or Vertical Shaft up or Other)**
   Example: Horizontal

10. **Ambient Condition (Outdoor or Indoor) and Ambient Temperature (°C)**
    Example : Indoor, 30-40 °C

11. **Overhung Loads F_R (N)**
    Example : 985 N, Not Over 1860 N (p.17)

12. **Additional Features of Motor (Protection Cover, Brake, Back Stop or Others)**
    Example : Brake

Conclusion : Choose XK2-15-0.75-4 with Brake Motor